Ground Investigation Factual Report

Mound 1 Delineation, AWE Burghfield, Berkshire

AWE plc

Prepared by:
Ben Crees

Authorised by:
Rob Jones

St. Anne's House
Oxford Square
Oxford Street
Newbury
Berks
RG14 1JQ

Tel 01635 279000
Fax 01635 279050
Email rpssw@rpsgroup.com

JER3996/MD1/LQA/F
Revision: 1
October 2008

This report has been produced by RPS within the terms of the contract with the client and taking account of the resources devoted to it by agreement with the client.

We disclaim any responsibility to the client and others in respect of any matters outside the scope of the above.

This report is confidential to the client and we accept no responsibility of whatsoever nature to third parties to whom this report, or any part thereof, is made known. Any such party relies on the report at their own risk

RPS Planning and Development Ltd. Registered in England No. 02947164
Centurion Court, 85 Milton Park, Abingdon, Oxfordshire, OX14 4RY
A Member of the RPS Group Plc

Planning & Development

Contents

Contents i

1 Introduction 1

1.1 Report Structure 1

2 Site Location and Description 2

2.1 General Description of AWE Burghfield 2

2.2 General Description of Project Mensa Area 2

2.3 General Description of the Mound 1 Area 2

3 Ground Investigation Methodology 4

3.1 Summary of Ground Investigation Siteworks 4

3.2 Investigation Standards 5

3.3 Exploratory Hole Location Survey 5

3.4 Radiological Surveying and Monitoring 5

3.4.1 Monitoring Equipment 5

3.4.2 Operational Monitoring 6

3.4.3 Radiological Survey Results 6

3.5 Intrusive Exploratory Holes 6

3.5.1 Trial Trenches 6

3.5.2 Trial Pits 7

3.5.3 Hand Dug Pits 8

3.6 Soil Sampling 9

3.7 Laboratory Analysis 10

3.7.1 Introduction 10

3.7.2 Soil Chemical Analysis 10

3.8 QA/QC Sampling Protocols 11

3.8.1 Sampling Storage and Transportation 11

4 References.....12

Tables

Table 3.5.1 **Summary of Trial Trench Locations, Final Depths and Lengths**

Table 3.5.2 **Summary of Trial Pit Locations and Final Depths**

Table 3.5.3 **Summary of Hand Dug Pit Locations and Final Depths**

Table 3.6 **Summary of Soil Sample Types**

Table 3.7.2 **Summary of Chemical Analysis Suite**

Drawings

JER3996-M1-001a	**Sampling Locations for Mound 1**
JER3860-GCTR-001c	**Proposed Development Layout**

Appendices

Appendix A **Operational Radiological Monitoring Results**

Appendix B **Excavation Logs**

Appendix C **Soil Analysis Results**

1 Introduction

RPS Planning and Development (RPS) have been requested by AWE plc via email from Steve Herridge dated 6th August 2008 to undertake a ground investigation to support the AWE Project Mensa development.

Previous investigations undertaken by RPS (*Ref. 1)* in Mound 1 have encountered fibrous and cement bound asbestos containing materials at shallow depth within the mounded material. As part of the Mensa development, the lateral extent of Mound 1 requires to be delineated so that a remediation strategy may be developed to mitigate risks posed to human health by the presence of asbestos at shallow depth.

This factual report provides a detailed account of the intrusive ground investigation undertaken, as part of the Mound 1 delineation as outlined within the Ground Investigation Proposal (*Ref. 2).* The data gathered from this investigation will be used to facilitate the delineation of the extent of Mound 1 to aid the redevelopment and landscaping of the surrounding area.

1.1 Report Structure

The remainder of the report is structured as follows:

Section 2; Site Location and Description;

Section 3; Site Investigation Methodology, and

Section 4; References.

2 Site Location and Description

2.1 General Description of AWE Burghfield

The AWE Burghfield site is located approximately 0.5 km east of Burghfield village and 6km to the south-west of Reading. The National Grid Reference for the site centre is approximately SU 680 680. AWE Burghfield is around 264 acres in size and roughly rectangular in shape. The topography is relatively flat with a general slope from south (46.5 mAOD) to north (42.5 mAOD).

AWE Burghfield is operated by AWE plc to produce explosives, explosive devices and assemble weapons associated with AWE's operations in their capacity to maintain the UK nuclear weapons capability. Consequently, some areas of AWE Burghfield are nuclear licensed.

Access to AWE Burghfield is from the north-west, via a road called 'The Mearings'. AWE Burghfield is surrounded by a high security fence and is subject to strict security controls. The eastern, southern and western edges of AWE Burghfield are bounded by roads.

A small stream, Burghfield Brook, flows along the southern and eastern edges of AWE Burghfield.

2.2 General Description of Project Mensa Area

The Project Mensa Development covers approximately 21.2 hectares and the bulk of the area is situated in the centre of AWE Burghfield. The Project Mensa Development also includes areas at the Main Gate to the northwest of the site, Pingewood Gate to the north east of the site, and access roads linking these three areas. The Mensa site is not within the nuclear licensed area. The Project Mensa Development area is shown on *Drawing JER3860-GCTR-001c*.

2.3 General Description of the Mound 1 Area

Mound 1 is located in the central part of AWE Burghfield immediately south of the Mensa application boundary. The exact location of Mound 1 is shown on *Drawing JER3860-GCTR-001c*. Mound 1 is predominantly covered with long

grass and small bushes/shrubs and has been subject to previous investigation (*Ref. 1*) which identified the mounded material to comprise demolition materials with asbestos (fibrous and cement bound) located at shallow depths.

In the absence of appropriate mitigation measures being implemented there is considered to be a potential risk posed to future site users and construction workers from shallow lying asbestos.

3 Ground Investigation Methodology

3.1 Summary of Ground Investigation Siteworks

The intrusive sampling locations are provided on *Drawing JER3996-M1-001a* and comprised the following work items:

- Setting out of excavation locations by an Environmental Consultant from RPS;
- Excavation of 8 trial trenches and 3 trial pits, using a JCB mechanical excavator, until natural ground was proven or the edge of Mound 1 could be observed;
- Excavation of 2 hand dug pits on Mound 1 and 2 hand dug pits on the adjacent blast bund using hand tools to a maximum depth of 1.2 mbGL (metres below Ground Level) (as agreed on site with Duncan McCallum);
- Radiological Screening and Monitoring of all locations by a Health Physics Supervisor to provide radioactivity assurance monitoring to protect staff involved in the survey work prior to and during excavations;
- Implementation of Explosive Safety Management and Ordnance Clearance Regime in order to ensure that the site investigation work was conducted safely with respect to the risk from explosives and ordnance;
- Sampling and analysis of any suspected Asbestos Containing Materials (ACMs) and establishment of the asbestos content of the soil matrix within Mound 1;
- Sampling of soils from the blast bund to establish the chemical nature of the material (as agreed on site with Duncan McCallum); and
- Topographic Survey to locate exploratory hole locations relative to ordnance datum and National Grid Reference;

3.2 Investigation Standards

The investigation was set in the context of relevant UK guidance and legislation relating to the pollution of land and controlled waters. The investigation was based on British Standard BS10175:2001 '*Investigation of Potentially Contaminated Sites – Code of Practice'* (*Ref 3*).

All fieldwork and laboratory analysis was undertaken based on BS5930 (*Ref 4*) and BS1377 (*Ref 5*).

3.3 Exploratory Hole Location Survey

The co-ordinates and levels of the trial pit positions were surveyed by Engineering Land and Building Surveys Limited following the completion of the site works. All positions and elevations were recorded to ordnance survey grid and are shown on *Drawing JER3996-M1-001a.*

3.4 Radiological Surveying and Monitoring

Due to part of AWE Burghfield being operated as a Nuclear Licensed Site, and based on the potential for radiological materials to be present within the ground underlying the site, radiological monitoring was undertaken at each excavation position by the Health Physicist for reassurance purposes. The sampling locations were surveyed for radiological activity prior to commencement, and during all site works, to ensure that no significant radiological hazards existed that could represent an unacceptable risk to workers.

3.4.1 Monitoring Equipment

The equipment used for the radiological monitoring comprised the following radiation / contamination survey meters:

- Exploranium GR-130 MinSPEC – a hand held Sodium Iodide gamma spectrometer;
- NE Electra rate-meter with DP6 probe for detection of alpha and beta radiations.

Valid calibration certificates accompanied all instruments. The Electra/DP6s had been calibrated using, *inter alia*, a natural uranium source, ensuring that

the instruments' response had been determined against the most likely contaminant on the site.

Prior to use, each instrument was subjected to a comprehensive daily functional check.

3.4.2 Operational Monitoring

Pre-screening of all the areas selected for investigation was undertaken utilising the survey meters listed in *Section 3.4.1.* At each of the sampling locations, background readings for the instruments were determined at waist height. Monitoring of the local surface surrounding the location was undertaken prior to work commencing. The observed count-rate was compared with the background count-rate and if the observed count-rate was less than twice the background count-rate it was inferred that the area was free from significant radiological contamination close to the surface. If observed count rate was less than twice background, the sampling operations could commence without restriction.

At no time during the excavation and sampling operations were levels of radioactivity encountered indicative of radiological contamination.

It was not anticipated that any elevated levels of radioactivity would be encountered, however monitoring of excavated material was undertaken at regular intervals throughout the sampling process to reinforce the conclusion that the radiological hazards to site staff associated with the works were not significant.

3.4.3 Radiological Survey Results

Operational monitoring results are summarised within *Appendix A.*

3.5 Intrusive Exploratory Holes

3.5.1 Trial Trenches

During the ground investigation a total of 8 trial trenches were excavated using a JCB wheeled excavator to depths of between 0.5mbGL and 1.3mbGL, and lengths ranging from 2.95m to 5.0m. The trial trenches were initially excavated on the edge of the mound as defined by topography and were advanced away

from the mound to delineate the horizontal extent of the mounds fill material. If no mound materials were encountered during the initial excavation, the trench was then gradually excavated into the mound until the extent of the mound could be ascertained. A summary of the trial trench locations, depths and lengths is presented in *Table 3.5.1* below:

Table 3.5.1 Summary of Trial Trench Locations, Final Depths and Lengths

Trial Trench Location Reference Number	Depth (mbGL)	Length (m)
TTMD1-001	0.50	4.40
TTMD1-002	0.80	3.90
TTMD1-003	0.80	4.10
TTMD1-004	0.95	2.95
TTMD1-005	1.30	5.00
TTMD1-006	1.30	4.40
TTMD1-007	0.80	4.40
TTMD1-008	1.10	4.90

mbGL – metres below ground level

Copies of the trial trench logs are provided in *Appendix B* and the locations of the trenches are shown on *Drawing JER3996-M1-001a.*

Throughout the excavation, health physics and explosive ordnance monitoring was undertaken. An Environmental Consultant from RPS logged the arisings and collected soil samples at regular intervals throughout the excavations. Where potentially contaminated materials were identified on a visual and olfactory basis, additional samples were collected and scheduled for appropriate analysis.

Upon completion all excavations were backfilled using arisings ensuring that no suspected ACMs were left on the ground surface.

3.5.2 Trial Pits

During the ground investigation a total of three 3 trial pits were excavated using a JCB wheeled excavator to depths of between 2.4mbGL and 2.6mbGL. Trial pits were excavated along the northern edge of the mound to provide additional

information on the soils to the northern extent of Mound 1. A summary of the trial pit locations and final depths is presented in *Table 3.5.2* below:

Table 3.5.2 Summary of Trial Pit Locations and Final Depths

Trial Trench Location Reference Number	Depth (mbGL)
TPMD1-001	2.50
TPMD1-002	2.60
TPMD1-003	2.40

mbGL – metres below ground level

Copies of the trial pit logs are provided in *Appendix B* and the locations of the trial pits are shown on *Drawing JER3996-M1-001a.*

Throughout the excavation, health physics and explosive ordnance monitoring was undertaken. An Environmental Consultant from RPS logged the arisings and collected soil samples at regular intervals throughout the excavations. Where potentially contaminated materials were identified on a visual and olfactory basis, additional samples were collected and scheduled for appropriate analysis.

Upon completion all excavations were backfilled using arisings.

3.5.3 Hand Dug Pits

Further to conversations with Duncan McCallum and Steve Herridge (both AWE), it was agreed that no machine dug trial trenches were to be excavated on top of Mound 1, due to the potential risk of the excavator wheels causing rutting of the wet soils, thereby potentially exposing ACMs that lay at shallow depth.

Therefore, a total of 4 hand dug pits were excavated using hand tools to depths of between 0.6mbGL and 1.2mbGL. 2 hand dug pits were excavated on top of Mound 1 and 2 pits were excavated on the immediately adjacent earth blast bund to delineate the edge of each mound. Due to the nature of the underlying made ground (see *Appendix B*) within Mound 1 and to a lesser extent the blast bund the excavation of the hand dug pits proved very difficult, therefore the target depth of 1.2mbGL was not achieved within the pits dug within Mound 1.

A summary of the hand dug pit locations and final depths is presented in *Table 3.5.3* below:

Table 3.5.3 Summary of Hand Dug Pit Locations and Final Depths

Trial Trench Location Reference Number	Depth (mbGL)
HPMD1-001	0.60
HPMD1-002*	1.20
HPMD1-003*	1.20
HPMD1-004	0.60

mbGL – metres below ground level

* Hand dug pit excavated on blast bund adjacent to Mound 1.

Copies of the hand dug pit logs are provided in *Appendix B* and the locations of the trenches are shown on *Drawing JER3996-M1-001a.*

Throughout the excavation, health physics and explosive ordnance monitoring was undertaken. An Environmental Consultant from RPS logged the arisings and collected soil samples at regular intervals throughout the excavations. Where potentially contaminated materials were identified on a visual and olfactory basis, additional samples were collected and scheduled for appropriate chemical analysis.

Upon completion all excavations were backfilled using arisings.

3.6 Soil Sampling

During the site investigation, soil samples considered to be representative of soil conditions were collected from the excavation locations for laboratory analysis. The depth at which soil samples were collected depended upon the analytical program, visual and olfactory field observations and as deemed necessary by the supervising RPS Environmental Consultant. An outline of the sampling strategy is as follows:

- Composite soil samples for asbestos screening were taken between ground level and 0.6mbGL at each of the exploratory locations. Each of the samples was representative of the ground conditions encountered and comprised approximately 1-2kg of material, which was placed into clean airtight polyethylene tubs as supplied by the laboratory;

- Samples of suspected ACMs were taken where identified and sealed within clean airtight polyethylene tubs as supplied by the laboratory;
- Composite soil samples for chemical analysis were taken from the 2 hand dug pits located on the soil blast bund immediately adjacent to Mound 1. Each of the samples was representative of the ground conditions encountered and comprised approximately 3kg of material, which was then sub-sampled and placed into clean airtight polyethylene tubs and amber glass jars supplied by the laboratory;

Each disturbed soil sample was labelled with a unique reference number together with the project details. Samples were sent to TES Bretby's laboratory for chemical analysis.

The soil sample types and depths are presented in the logs in *Appendix B* and the sample codes used on the exploratory logs are provided in *Table 3.6*.

Table 3.6 Summary of Soil Sample Types

Sample Type Code	Sample Type
D	Disturbed soil sample including glass amber jars and plastic tubs for chemical analysis.
ASB	Sample of suspected Asbestos Containing Material

3.7 Laboratory Analysis

3.7.1 Introduction

Soil samples were analysed for various suites of determinants and any soils with visual or olfactory evidence of contamination were scheduled for appropriate analysis.

3.7.2 Soil Chemical Analysis

Soil samples considered to be representative of ground conditions at the site were submitted to UKAS accredited TES Bretby's laboratory, Burton-on-Trent for chemical analysis.

15 soil samples were scheduled for asbestos screening and an additional 2 suspected ACMs were scheduled for asbestos identification.

Two soil samples from the blast bund were scheduled for chemical analysis as outlined in *Table 3.7.2* below:

Table 3.7.2 Summary of Chemical Analysis Suite

Determinant	Laboratory Limits of Detection (LOD)
Metals – As, Ba, Be, B, Cd, Cr, Cu, Pb, Mg, Ni, Se, V & Zn	0.1 – 19.5 mg/kg
Chloride	5.0 mg/kg
pH	n/a
Total Sulphur	20 mg/kg
Sulphide	0.5 mg/kg
Polyaromatic Hydrocarbons (PAHs) USEPA 17 – Inc Coronene	0.08 mg/kg
Total Petroleum Hydrocarbons (TPH) C5-C40 (Aliphatic/Aromatic split)	10 mg/kg
Fraction Organic Carbon (FOC)	0.02%

The soil analysis results are provided in *Appendix C.*

3.8 QA/QC Sampling Protocols

3.8.1 Sampling Storage and Transportation

All samples were stored and transported in cool boxes with ice packs to ensure a nominal temperature of + 4°C ± 2°C. Samples were delivered to TES Bretby's laboratory, Burton-upon-Trent, for chemical analysis.

4 References

1. RPS. Factual Geo – Environmental Ground Investigation Report at the Phase 2A Demolition Area, Zone 1, AWE (B) (Nov 2005);

2. RPS Ground Investigation Proposal for Project Mensa Additional Site Investigation - Mound 1 Delineation and Gas Monitoring, (RPS Ref. JER3996/MENSA/M1 & GM/GI/Q1), July 2008.

3. BS10175; Code of Practice for Investigation Potentially Contaminated Sites, 2001;

4. BS5930: Code of Practice for Site Investigations, 1999;

5. BS1377: Methods of Tests for Soils for Civil Engineering Purposes. General Requirements and Sample Preparation, 1990;

Drawings

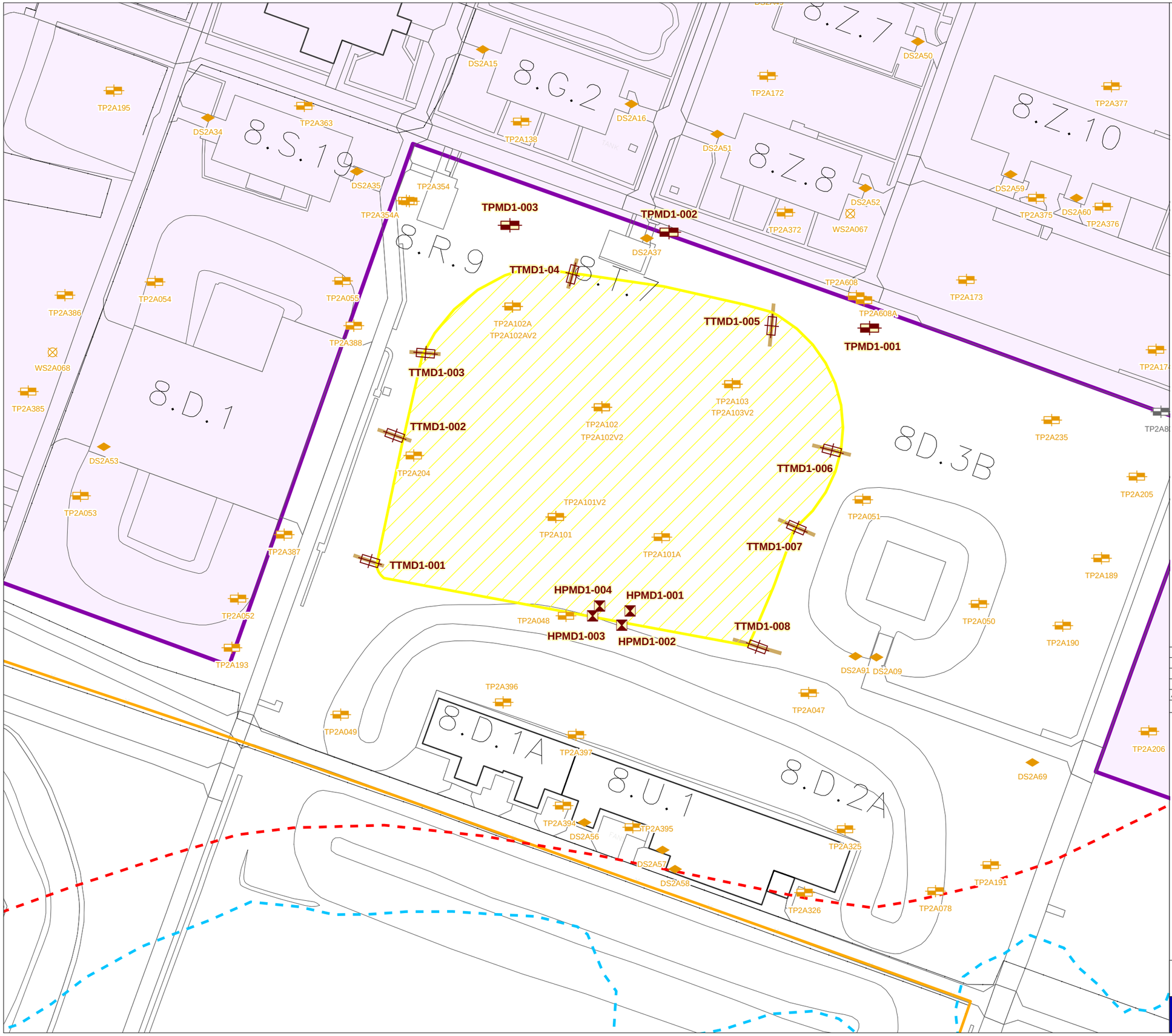

LEGEND

- Mensa Application Area
- Phase 2A Demolition Area
- Mound 1
- Burghfield Brook (Former Course)
- Approximate Extent of Alluvium Boundary on BGS 1:10,000 Geology Map

Investigation Locations

- Hand Dug Pit
- Trial Pit
- Trial Trench (with Extent)

Previous Investigation Locations

Gate 22 Investigation (2006)

- Trial Pit

Phase 2A Demolition Area LQA (2005)

- Probehole
- Trial Pit
- Sediment Sample

Rev:	Date:	Amendment:	Name:	Checked:
A	17/09/08	Surveyed Locations, 2008 Basemap	RJ	GM

Data Source: RPS 2008

Status: PRELIMINARY

RPS
Conrad House Beaufort Square Chepstow Monmouthshire NP16 5EP
T 01235 838200 F 01235 820351 E rpsox@rpsgroup.com W www.rpsplc.co.uk

Client: AWE Plc

Project: Mensa Additional Ground Investigation

Title: Sampling Locations for Mound 1

Scale: A3 @ 1:500

0 0.01 0.02 km

N

Date: 04/07/2008 Datum: OSGB36 Projection: BNG

Drawn: RJ Checked: GM Job Ref: JER3996

Figure No: **JER3996-M1-001a** Revision: **A**

Project Ref: J:\Drawings\JER3996

© Crown copyright, All rights reserved. 2008 License number 0100031673

Legend

- AWE Burghfield Fence Line
- Mensa Application Area
- Mound 1

Mensa Facility Development & Ancilliary Buildings

- Energy Centre
- Main Process Facility
- Support Facility
- Intake Substation
- Additional Buildings

Previous Investigation Areas

- CMR Application Site Area
- Phase 1A Demolition Area
- Phase 2A Demolition Area

For further detail of the Mensa Facility Development please refer to drawings:

B.MENSA-MOT-00-GF-DRW-CE-CB-00101 (Rev P5) and;

B.SITE-MOT-00-GF-DRW-CE-CB-00101 (Rev P14) and;

243405_AE_GA001 (Rev P6).

Rev:	Date:	Amendment:	Name:	Checked:
C	30/09/08	Revised Mensa Boundary & Mound 1	RJ	GM
B	25/07/08	Revised Mensa Boundary & Buildings	RJ	SJ
A	17/03/08	Revised Mensa Boundary	RJ	SJ

Data Source: RPS 2008

Status: PRELIMINARY

RPS

Conrad House Beaufort Square Chepstow Monmouthshire NP16 5EP
T 01235 838200 F 01235 820351 E rpsox@rpsgroup.com W www.rpsplc.co.uk

Client: AWE Plc

Project: Project Mensa

Title: Mensa Application Site Area including Previous Investigation Areas

Scale: A3 @ 1:5,000

0 0.125 0.25 km

N

Date: 11/10/2007 Datum: OSGB36 Projection: BNG

Drawn: RJ Checked: SJ Job Ref: JER3860

Drawing No: **JER3860-GCTR-001c** Revision: **C**

Project Ref: J:\Drawings\JER3860

© Crown copyright, All rights reserved. 2008 License number 0100031673

Appendices

Appendix A

Operational Radiological Monitoring Results

HEALTH PHYSICS MONITORING FORM FOR BOREHOLES / TRIAL PITS

RPS

DATE	20/08/08	BOREHOLE / TRIAL PIT REFERENCE NUMBER		TP MD1 – 001	
INSTRUMENT TYPE	INSTRUMENT MODEL	SERIEL NUMBER	CALIBRATION DATE	BACKGROUND READINGS	
Dose Rate Meter	GR-130	9765	Due 27th May 2009	78 – 100	
				µSv/hr	
Ratemeter + Probe	Electra	288	Due 10th June 2009	α (cps)	β (cps)
				0	
	DP6	2765	Due 10th June 2009		6 – 8

Surface Monitoring	Dose Rate (µSv/hr)	Contamination		
		α (cps)	β (cps)	Gamma (cps)
		0	6 – 8	76 – 104

Material Surveyed (Made Ground, Clay etc)	Depth (mbGL)	Dose Rate (µSv/hr)	Contamination		
			α (cps)	β (cps)	gamma (cps)
	1.0		0	6 – 8	78 – 94
	2.50		0	7 – 9	93 – 129

Ancillary Equipment (drill rig, tools etc)	Dose Rate (µSv/hr)	Contamination	
		α (cps)	β (cps)

See over

DATE		BOREHOLE / TRIAL PIT REFERENCE NUMBER	

Additional Comments/Actions

All samples recorded at background activity levels

Monitors Name (print)		Monitors Signature	

HEALTH PHYSICS MONITORING FORM FOR BOREHOLES / TRIAL PITS

RPS

DATE	20/08/08	BOREHOLE / TRIAL PIT REFERENCE NUMBER		TP MD1 – 002	
INSTRUMENT TYPE	INSTRUMENT MODEL	SERIEL NUMBER	CALIBRATION DATE	BACKGROUND READINGS	
Dose Rate Meter	GR-130	9765	Due 27th May 2009	71 – 89	
				µSv/hr	
Ratemeter + Probe	Electra	288	Due 10th June 2009	α (cps)	β (cps)
				0	
	DP6	2765	Due 10th June 2009		6 – 8

Surface Monitoring	Dose Rate (µSv/hr)	Contamination		
		α (cps)	β (cps)	Gamma (cps)
		0	6 – 8	75 – 98

Material Surveyed (Made Ground, Clay etc)	Depth (mbGL)	Dose Rate (µSv/hr)	Contamination		
			α (cps)	β (cps)	gamma (cps)
	0.60		0	6 – 8	72 – 91
	2.60		0	7 – 9	93 – 125

Ancillary Equipment (drill rig, tools etc)	Dose Rate (µSv/hr)	Contamination	
		α (cps)	β (cps)

See over

DATE		BOREHOLE / TRIAL PIT REFERENCE NUMBER	

Additional Comments/Actions

All samples recorded at background activity levels

Monitors Name (print)		Monitors Signature	

HEALTH PHYSICS MONITORING FORM FOR BOREHOLES / TRIAL PITS

RPS

DATE	20/08/08	BOREHOLE / TRIAL PIT REFERENCE NUMBER		TP MD1 – 003	
INSTRUMENT TYPE	INSTRUMENT MODEL	SERIEL NUMBER	CALIBRATION DATE	BACKGROUND READINGS	
Dose Rate Meter	GR-130	9765	Due 27th May 2009	72 – 93	
				µSv/hr	
Ratemeter + Probe	Electra	288	Due 10th June 2009	α (cps)	β (cps)
				0	
	DP6	2765	Due 10th June 2009		6 – 8

Surface Monitoring	Dose Rate (µSv/hr)	Contamination		
		α (cps)	β (cps)	Gamma (cps)
		0	6 – 8	74 – 95

Material Surveyed (Made Ground, Clay etc)	Depth (mbGL)	Dose Rate (µSv/hr)	Contamination		
			α (cps)	β (cps)	gamma (cps)
	1.30		0	6 – 8	87 – 106
	2.40		0	7 – 9	93 – 127

Ancillary Equipment (drill rig, tools etc)	Dose Rate (µSv/hr)	Contamination	
		α (cps)	β (cps)

See over

DATE		BOREHOLE / TRIAL PIT REFERENCE NUMBER	

Additional Comments/Actions

All samples recorded at background activity levels

Monitors Name (print)		Monitors Signature	

HEALTH PHYSICS MONITORING FORM FOR BOREHOLES / TRIAL PITS

RPS

DATE	19/08/08	BOREHOLE / TRIAL PIT REFERENCE NUMBER		TT MD1- 001	
INSTRUMENT TYPE	INSTRUMENT MODEL	SERIEL NUMBER	CALIBRATION DATE	BACKGROUND READINGS	
Dose Rate Meter	GR-130	9765	Due 27th May 2009	76 – 93 cps	
				µSv/hr	
Ratemeter + Probe	Electra	288	Due 10th June 2009	α (cps)	β (cps)
				0	
	DP6	2765	Due 10th June 2009		6 – 8

Surface Monitoring	Dose Rate (µSv/hr)	Contamination		
		α (cps)	β (cps)	gamma (cps)
	Surface	0	6 – 8	73 – 94

Material Surveyed (Made Ground, Clay etc)	Depth (mbGL)	Dose Rate (µSv/hr)	Contamination		
			α (cps)	β (cps)	gamma (cps)
	0.50		0	6 – 8	78 – 96

Ancillary Equipment (drill rig, tools etc)	Dose Rate (µSv/hr)	Contamination	
		α (cps)	β (cps)

See over

DATE		BOREHOLE / TRIAL PIT REFERENCE NUMBER	

Additional Comments/Actions

All samples recorded at background activity levels

Monitors Name (print)		Monitors Signature	

HEALTH PHYSICS MONITORING FORM FOR BOREHOLES / TRIAL PITS

RPS

DATE	19/08/08	BOREHOLE / TRIAL PIT REFERENCE NUMBER		TT MD1 – 002	
INSTRUMENT TYPE	INSTRUMENT MODEL	SERIEL NUMBER	CALIBRATION DATE	BACKGROUND READINGS	
Dose Rate Meter	GR-130	9765	Due 27th May 2009	85 – 103 cps	
				µSv/hr	
Ratemeter + Probe	Electra	288	Due 10th June 2009	α (cps)	β (cps)
				0	
	DP6	2765	Due 10th June 2009		6 – 8

Surface Monitoring	Dose Rate (µSv/hr)	Contamination		
		α (cps)	β (cps)	gamma (cps)
	Surface	0	6 – 8	86 – 102

Material Surveyed (Made Ground, Clay etc)	Depth (mbGL)	Dose Rate (µSv/hr)	Contamination		
			α (cps)	β (cps)	gamma (cps)
	1.0		0	6 – 8	91 – 110

Ancillary Equipment (drill rig, tools etc)	Dose Rate (µSv/hr)	Contamination	
		α (cps)	β (cps)

See over

DATE		BOREHOLE / TRIAL PIT REFERENCE NUMBER	

Additional Comments/Actions

All samples recorded at background activity levels

Monitors Name (print)		Monitors Signature	

HEALTH PHYSICS MONITORING FORM FOR BOREHOLES / TRIAL PITS

RPS

DATE	19/08/08	BOREHOLE / TRIAL PIT REFERENCE NUMBER		TT MD1 - 003	
INSTRUMENT TYPE	INSTRUMENT MODEL	SERIEL NUMBER	CALIBRATION DATE	BACKGROUND READINGS	
Dose Rate Meter	GR-130	9765	Due 27th May 2009	72 – 108 cps	
				µSv/hr	
Ratemeter + Probe	Electra	288	Due 10th June 2009	α (cps)	β (cps)
				0	
	DP6	2765	Due 10th June 2009		6 – 8

Surface Monitoring	Dose Rate (µSv/hr)	Contamination		
		α (cps)	β (cps)	gamma (cps)
		0	6 – 8	74 – 110

Material Surveyed (Made Ground, Clay etc)	Depth (mbGL)	Dose Rate (µSv/hr)	Contamination		
			α (cps)	β (cps)	gamma (cps)
	0.80		0	6 – 8	91 – 108

Ancillary Equipment (drill rig, tools etc)	Dose Rate (µSv/hr)	Contamination	
		α (cps)	β (cps)

See over

DATE		BOREHOLE / TRIAL PIT REFERENCE NUMBER	

Additional Comments/Actions

All samples recorded at background activity levels

Monitors Name (print)		Monitors Signature	

HEALTH PHYSICS MONITORING FORM FOR BOREHOLES / TRIAL PITS

RPS

DATE	19/08/08	BOREHOLE / TRIAL PIT REFERENCE NUMBER		TT MD1 – 004	
INSTRUMENT TYPE	INSTRUMENT MODEL	SERIEL NUMBER	CALIBRATION DATE	BACKGROUND READINGS	
Dose Rate Meter	GR-130	9765	Due 27th May 2009	75 – 99	
				µSv/hr	
Ratemeter + Probe	Electra	288	Due 10th June 2009	α (cps)	β (cps)
				0	
	DP6	2765	Due 10th June 2009		6 – 8

Surface Monitoring	Dose Rate (µSv/hr)	Contamination		
		α (cps)	β (cps)	gamma (cps)
		0	6 – 8	72 – 95

Material Surveyed (Made Ground, Clay etc)	Depth (mbGL)	Dose Rate (µSv/hr)	Contamination		
			α (cps)	β (cps)	gamma (cps)
	1.0		0	6 – 8	68 – 104

Ancillary Equipment (drill rig, tools etc)	Dose Rate (µSv/hr)	Contamination	
		α (cps)	β (cps)

See over

DATE		BOREHOLE / TRIAL PIT REFERENCE NUMBER	

Additional Comments/Actions

All samples recorded at background activity levels

Monitors Name (print)		Monitors Signature	

HEALTH PHYSICS MONITORING FORM FOR BOREHOLES / TRIAL PITS

RPS

DATE	19/08/08	BOREHOLE / TRIAL PIT REFERENCE NUMBER		TT MD1 – 005	
INSTRUMENT TYPE	INSTRUMENT MODEL	SERIEL NUMBER	CALIBRATION DATE	BACKGROUND READINGS	
Dose Rate Meter	GR-130	9765	Due 27th May 2009	69 – 94	
				µSv/hr	
Ratemeter + Probe	Electra	288	Due 10th June 2009	α (cps)	β (cps)
				0	
	DP6	2765	Due 10th June 2009		6 – 8

Surface Monitoring	Dose Rate (µSv/hr)	Contamination		
		α (cps)	β (cps)	Gamma (cps)
		0	6 – 8	67 – 92

Material Surveyed (Made Ground, Clay etc)	Depth (mbGL)	Dose Rate (µSv/hr)	Contamination		
			α (cps)	β (cps)	gamma (cps)
	1.30		0	6 – 8	72 – 106

Ancillary Equipment (drill rig, tools etc)	Dose Rate (µSv/hr)	Contamination	
		α (cps)	β (cps)

See over

DATE		BOREHOLE / TRIAL PIT REFERENCE NUMBER	

Additional Comments/Actions

All samples recorded at background activity levels

Monitors Name (print)		Monitors Signature	

HEALTH PHYSICS MONITORING FORM FOR BOREHOLES / TRIAL PITS

RPS

DATE	19/08/08	BOREHOLE / TRIAL PIT REFERENCE NUMBER		TT MD1 – 006	
INSTRUMENT TYPE	INSTRUMENT MODEL	SERIEL NUMBER	CALIBRATION DATE	BACKGROUND READINGS	
Dose Rate Meter	GR-130	9765	Due 27th May 2009	67 – 93	
				µSv/hr	
Ratemeter + Probe	Electra	288	Due 10th June 2009	α (cps)	β (cps)
				0	
	DP6	2765	Due 10th June 2009		6 – 8

Surface Monitoring	Dose Rate (µSv/hr)	Contamination		
		α (cps)	β (cps)	Gamma (cps)
		0	6 – 8	69 – 95

Material Surveyed (Made Ground, Clay etc)	Depth (mbGL)	Dose Rate (µSv/hr)	Contamination		
			α (cps)	β (cps)	gamma (cps)
	1.30		0	6 – 8	94 – 124

Ancillary Equipment (drill rig, tools etc)	Dose Rate (µSv/hr)	Contamination	
		α (cps)	β (cps)

See over

DATE		BOREHOLE / TRIAL PIT REFERENCE NUMBER	

Additional Comments/Actions

All samples recorded at background activity levels

Monitors Name (print)		Monitors Signature	

HEALTH PHYSICS MONITORING FORM FOR BOREHOLES / TRIAL PITS

RPS

DATE	20/08/08	BOREHOLE / TRIAL PIT REFERENCE NUMBER		TT MD1 – 007	
INSTRUMENT TYPE	INSTRUMENT MODEL	SERIEL NUMBER	CALIBRATION DATE	BACKGROUND READINGS	
Dose Rate Meter	GR-130	9765	Due 27th May 2009	74 – 91	
				µSv/hr	
Ratemeter + Probe	Electra	288	Due 10th June 2009	α (cps)	β (cps)
				0	
	DP6	2765	Due 10th June 2009		6 – 8

Surface Monitoring	Dose Rate (µSv/hr)	Contamination		
		α (cps)	β (cps)	Gamma (cps)
		0	6 – 8	76 – 93

Material Surveyed (Made Ground, Clay etc)	Depth (mbGL)	Dose Rate (µSv/hr)	Contamination		
			α (cps)	β (cps)	gamma (cps)
	0.80		0	6 – 8	73 – 89

Ancillary Equipment (drill rig, tools etc)	Dose Rate (µSv/hr)	Contamination	
		α (cps)	β (cps)

See over

DATE		BOREHOLE / TRIAL PIT REFERENCE NUMBER	

Additional Comments/Actions

All samples recorded at background activity levels

Monitors Name (print)		Monitors Signature	

HEALTH PHYSICS MONITORING FORM FOR BOREHOLES / TRIAL PITS

RPS

DATE	20/08/08	BOREHOLE / TRIAL PIT REFERENCE NUMBER		TT MD1 – 008	
INSTRUMENT TYPE	INSTRUMENT MODEL	SERIEL NUMBER	CALIBRATION DATE	BACKGROUND READINGS	
Dose Rate Meter	GR-130	9765	Due 27th May 2009	65 – 86	
				µSv/hr	
Ratemeter + Probe	Electra	288	Due 10th June 2009	α (cps)	β (cps)
				0	
	DP6	2765	Due 10th June 2009		6 – 8

Surface Monitoring	Dose Rate (µSv/hr)	Contamination		
		α (cps)	β (cps)	Gamma (cps)
		0	6 – 8	68 – 87

Material Surveyed (Made Ground, Clay etc)	Depth (mbGL)	Dose Rate (µSv/hr)	Contamination		
			α (cps)	β (cps)	gamma (cps)
	1.10		0	6 – 8	72 – 105

Ancillary Equipment (drill rig, tools etc)	Dose Rate (µSv/hr)	Contamination	
		α (cps)	β (cps)

See over

DATE		BOREHOLE / TRIAL PIT REFERENCE NUMBER	

Additional Comments/Actions

All samples recorded at background activity levels

Monitors Name (print)		Monitors Signature	

Appendix B

Excavation Logs

TRIAL PIT LOG

Trial Pit No.
TPMD1-001
Sheet 1 of 1

Project Name:	Mensa Remediation Works	Co-ords:	N - 167940.61 E - 467957.18	Ground Level 44.580mOD	Date: 20/08/2008
Project No.	JER3996/MD1				
Location:	AWE Burghfield	Weather:	Cloudy		Scale 1:25
Client:	AWE plc	Equipment:	JCB 3CX		Logged by: BC

Samples & In Situ Testing				Depth (m)	Level (m AOD)	Legend	Stratum Description
Depth (m)	Type	Ref	Results				
0.00-0.40	D	1					Soft, brown, sandy, gravelly CLAY with frequent rootlets and brick fragments. Gravel is fine to coarse, angular to subrounded of flint. (MADE GROUND)
				0.50	44.08		Soft to firm, brown, mottled orange, sandy, gravelly CLAY. Gravel is fine to coarse, angular to subrounded of flint, chalk and mudstone. (MADE GROUND)
				1.00	43.58		Firm to stiff, brown, mottled orange and grey, sandy, slightly gravelly CLAY. Gravel is fine to medium, subangular to subrounded of flint and mudstone. (WEATHERED LONDON CLAY)
							Clay becoming stiff to very stiff with depth.
				2.50	42.08		Trial Pit Complete at 2.50 m

1 2 3 4

Stability: Stable

Groundwater: None encountered

Remarks: Trial pit terminated at 2.5mbGL due to excavator struggling in stiffer clays.

AGS

HoleBASE III (BM 414.8) Standard Trialpit Log v1 dated 26th Mar 03

TRIAL PIT LOG

Trial Pit No.
TPMD1-002
Sheet 1 of 1

Project Name:	Mensa Remediation Works	Co-ords:	N - 167953.48 E - 467930.21	Ground Level 44.690mOD	Date: 20/08/2008
Project No.	JER3996/MD1				
Location:	AWE Burghfield	Weather:	Cloudy		Scale 1:25
Client:	AWE plc	Equipment:	JCB 3CX		Logged by: BC

Samples & In Situ Testing				Depth (m)	Level (m AOD)	Legend	Stratum Description
Depth (m)	Type	Ref	Results				
0.00-0.60	D	1					Soft, brown, mottled orange with localised black staining, sandy, gravelly CLAY. Gravel is fine to coarse, angular to subrounded of flint. (MADE GROUND)
				0.60	44.09		Firm, brown, mottled orange and grey, sandy, slightly gravelly CLAY. Gravel is fine to medium, subangular to subrounded of flint and chalk. (MADE GROUND)
				1.00	43.69		Layer of bricks encountered - possible old land drain. (MADE GROUND)
				1.20	43.49		Firm to stiff, brown, mottled orange and grey, sandy, slightly gravelly CLAY. Gravel is fine to medium, subangular to subrounded of flint and mudstone. (WEATHERED LONDON CLAY)
							Clay becoming stiff to very stiff with depth.
				2.60	42.09		Trial Pit Complete at 2.60 m

Stability: Stable

Groundwater: None encountered

Remarks: Layer of bricks encountered at 1.0mbGL - possible old land drain

AGS

HoleBASE III (BM 414.8) Standard Trialpit Log V1 dated 26th Mar 03

TRIAL PIT LOG

Trial Pit No.
TPMD1-003
Sheet 1 of 1

Project Name:	Mensa Remediation Works	Co-ords:	N - 167954.40 E - 467908.75	Ground Level 45.220mOD	Date: 20/08/2008
Project No.	JER3996/MD1				
Location:	AWE Burghfield	Weather:	Cloudy		Scale 1:25
Client:	AWE plc	Equipment:	JCB 3CX		Logged by: BC

Samples & In Situ Testing				Depth (m)	Level (m AOD)	Legend	Stratum Description
Depth (m)	Type	Ref	Results				
0.00-0.60	D	1		0.20	45.02		Soft, brown, sandy, slightly gravelly CLAY with frequent rootlets. Gravel is fine to medium, subangular to subrounded of flint and chalk. (MADE GROUND)
							Soft, brown, mottled orange, sandy, slightly gravelly CLAY with occasional brick fragments and concrete cobbles. Gravel is fine to medium, subangular to subrounded of flint and chalk. (MADE GROUND)
							Clay pipe encountered at 0.6mbGL. - possible redundant land drain.
				0.90	44.32		Firm to stiff, brown, mottled orange and grey, sandy CLAY. (WEATHERED LONDON CLAY)
							Clay becoming stiff to very stiff with depth.
				2.40	42.82		Trial Pit Complete at 2.40 m

1
2
3
4

Stability: Stable

Groundwater: None encountered

Remarks: Trial pit terminated at 2.4mbGL due to excavator struggling in stiffer clays.

AGS

HoleBASE III (Bld 414.8) Standard Trialpit Log v1 dated 26th Mar 03

TRIAL TRENCH LOG

Trial Pit No.
TTMD1-001
Sheet 1 of 1

Project Name:	Mensa Remediation Works	Co-ords:	N - 167909.25 E - 467889.96	Ground Level 45.280mOD	Date: 19/08/2008
Project No.	JER3996/MD1				
Location:	AWE Burghfield	Weather:	Cloudy, Warm		Scale 1:25
Client:	AWE plc	Equipment:	JCB 3CX		Logged by: BC

Samples & In Situ Testing				Depth (m)	Level (m AOD)	Legend	Stratum Description
Depth (m)	Type	Ref	Results				
0.20-0.35	D	1					(A) Soft, brown, mottled orange, sandy, gravelly CLAY. Gravel is fine to coarse, subangular to subrounded of flint. Frequent bricks, wood, concrete cobbles and rebar. (MADE GROUND)
				0.35	44.93		Metal sheeting encountered at 0.3mbGL.
							(B) Soft to firm, brown, mottled orange, sandy CLAY. (MADE GROUND)
				0.50	44.78		Trial Pit Complete at 0.50 m

Trial Trench Extent

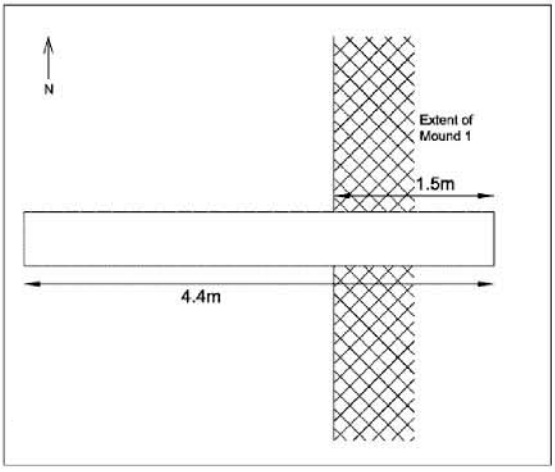

Stability: Stable

Groundwater: None encountered

Remarks: Made ground (A) appears to taper towards the west of the Trial Trench (away from the mound) with the overall thickness decreasing.

HoleBASE III (BM 414.8) Standard Trialpit Log v1 dated 26th Mar 03

TRIAL TRENCH LOG

Trial Pit No.
TTMD1-002
Sheet 1 of 1

Project Name:	Mensa Remediation Works	Co-ords: N - 167926.18 E - 467893.28	Ground Level 45.550mOD	Date:	19/08/2008
Project No.	JER3996/MD1				
Location:	AWE Burghfield	Weather:	Cloudy, Warm	Scale	1:25
Client:	AWE plc	Equipment:	JCB 3CX	Logged by:	BC

Samples & In Situ Testing				Depth (m)	Level (m AOD)	Legend	Stratum Description
Depth (m)	Type	Ref	Results				
							(A) Soft, brown, mottled orange, sandy, gravelly CLAY. Gravel is fine to coarse, subangular to subrounded of flint. Frequent bricks, wood, concrete cobbles and rebar. (MADE GROUND) Concrete slab encountered at 0.1mbGL. Concrete boulder (30cm x 20cm x 20cm) encountered at 0.2mbGL.
0.20-0.60	D	1		0.40	45.15		(B) Soft to firm, brown, mottled orange, sandy CLAY. (MADE GROUND)
				1.00	44.55		Trial Pit Complete at 1.00 m

Trial Trench Extent

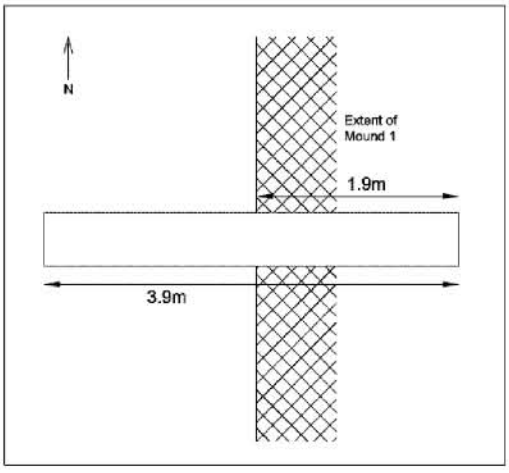

Stability: Stable

Groundwater: None encountered

Remarks: Made ground (A) appears to taper towards the west of the Trial Trench (away from the mound) with the overall thickness decreasing.

HoleBASE III (BM 414.8) Standard Trialpit Log v1 dated 26th Mar 03

TRIAL TRENCH LOG

Trial Pit No.
TTMD1-003
Sheet 1 of 1

Project Name:	Mensa Remediation Works	Co-ords:	N - 167937.18 E - 467897.43	Ground Level 46.190mOD	Date: 19/08/2008
Project No.	JER3996/MD1				
Location:	AWE Burghfield	Weather:	Cloudy, Warm		Scale 1:25
Client:	AWE plc	Equipment:	JCB 3CX		Logged by: BC

Samples & In Situ Testing				Depth (m)	Level (m AOD)	Legend	Stratum Description
Depth (m)	Type	Ref	Results				
0.20-0.35 0.35	D ASB	1 1		0.40	45.79		(A) Soft, brown, mottled orange, sandy, gravelly CLAY. Gravel is fine to coarse, subangular to subrounded of flint. Frequent bricks, wood, concrete cobbles, rebar and occasional pottery. (MADE GROUND) Asbestos cement fragment encountered at 0.35mbGL.
				1.00	45.19		(B) Soft to firm, brown, mottled orange, sandy, slightly gravelly CLAY. Gravel is fine to coarse, subangular to subrounded or chalk and flint. (MADE GROUND) Trial Pit Complete at 0.80 m

Trial Trench Extent

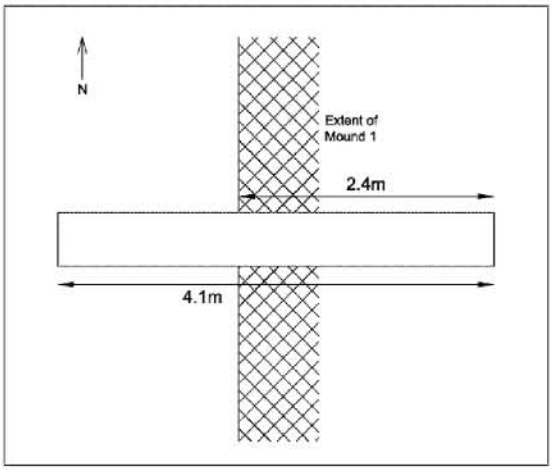

Stability: Stable

Groundwater: None encountered

Remarks: Made ground (A) appears to taper towards the west of the Trial Trench (away from the mound) with the overall thickness decreasing.

HoleBASE III (BM 414.8) Standard Trialpit Log v1 dated 26th Mar 03

TRIAL TRENCH LOG

Trial Pit No.
TTMD1-004
Sheet 1 of 1

Project Name:	Mensa Remediation Works	Co-ords: N - 167947.80 E - 467917.22	Ground Level 45.300mOD	Date:	19/08/2008
Project No.	JER3996/MD1				
Location:	AWE Burghfield	Weather:	Cloudy, Warm	Scale	1:25
Client:	AWE plc	Equipment:	JCB 3CX	Logged by:	BC

Samples & In Situ Testing				Depth (m)	Level (m AOD)	Legend	Stratum Description
Depth (m)	Type	Ref	Results				
							(A) Soft, brown, mottled orange, sandy, gravelly CLAY. Gravel is fine to coarse, subangular to subrounded of flint. Frequent whole and broken bricks, concrete cobbles and occasional pottery. (MADE GROUND)
							Large metal sheet (100cm x 50cm) encountered at 0.25mbGL.
				0.60	44.70		(B) Soft to firm, brown, mottled orange, sandy CLAY. (MADE GROUND)
0.80	D	1					
				0.95	44.35		Trial Pit Complete at 0.95 m

Trial Trench Extent

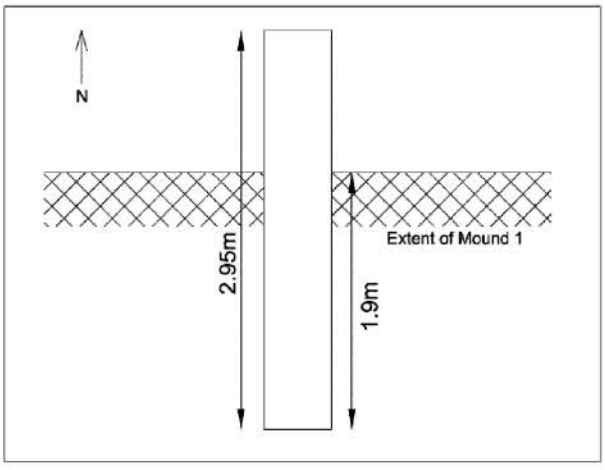

Stability: Stable

Groundwater: None encountered

Remarks: Made ground (A) appears to taper towards the north of the Trial Trench (away from the mound) with the overall thickness decreasing.

HoleBASE III (Bld 414.8) Standard Trialpit Log v1 dated 26th Mar 03

TRIAL TRENCH LOG

Trial Pit No.
TTMD1-005
Sheet 1 of 1

Project Name:	Mensa Remediation Works	Co-ords:	N - 167940.90 E - 467944.00	Ground Level 45.140mOD	Date: 19/08/2008
Project No.	JER3996/MD1				
Location:	AWE Burghfield	Weather:	Cloudy, Warm		Scale 1:25
Client:	AWE plc	Equipment:	JCB 3CX		Logged by: BC

Samples & In Situ Testing				Depth (m)	Level (m AOD)	Legend	Stratum Description
Depth (m)	Type	Ref	Results				
0.30-0.50	D	1					(A) Soft, brown, mottled orange, sandy, gravelly CLAY. Gravel is fine to coarse, subangular to subrounded of flint. Frequent whole and broken bricks, concrete cobbles, rebar and pieces of black plastic. (MADE GROUND)
				0.60	44.54		(B) Soft to firm, brown, mottled orange, sandy CLAY. (MADE GROUND) Layer of red bricks encountered at 0.7mbGL.
				1.30	43.84		Trial Pit Complete at 1.30 m

Trial Trench Extent

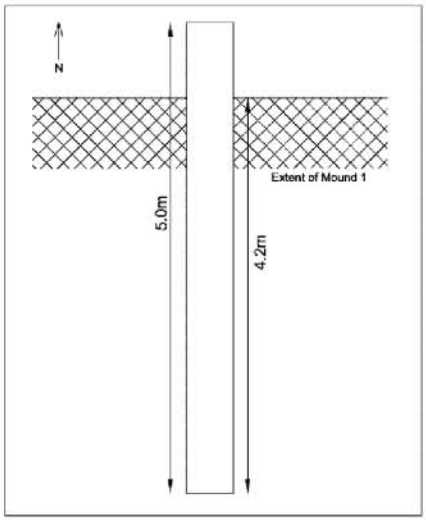

Stability: Stable

Groundwater: None encountered

Remarks: Made ground (A) appears to taper towards the north of the Trial Trench (away from the mound) with the overall thickness decreasing.

HoleBASE III (BM 414.8) Standard Trialpit Log V1 dated 26th Mar 03

TRIAL TRENCH LOG

Trial Pit No.
TTMD1-006
Sheet 1 of 1

Project Name:	Mensa Remediation Works	Co-ords: N - 167924.12 E - 467952.12	Ground Level 45.260mOD	Date:	19/08/2008
Project No.	JER3996/MD1				
Location:	AWE Burghfield	Weather:	Cloudy, Warm	Scale	1:25
Client:	AWE plc	Equipment:	JCB 3CX	Logged by:	BC

Samples & In Situ Testing				Depth (m)	Level (m AOD)	Legend	Stratum Description
Depth (m)	Type	Ref	Results				
							(A) Soft, brown, mottled orange, sandy, gravelly CLAY. Gravel is fine to coarse, angular to subrounded of flint and chalk. Frequent whole and broken bricks, concrete cobbles, rebar and fragments of wood.. (MADE GROUND) Layer of red bricks encountered at 0.2mbGL. Wooden post encountered at 0.4mbGL.
0.80	D	1		0.80	44.46		(B) Soft to firm, brown, mottled orange, sandy CLAY. (MADE GROUND)
				1.30	43.96		Trial Pit Complete at 1.30 m

Trial Trench Extent

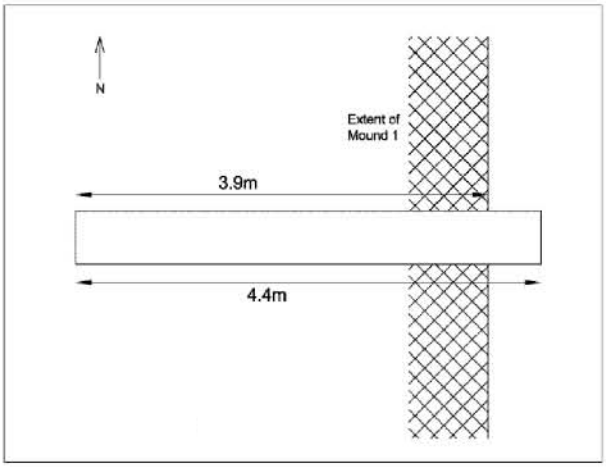

Stability: Stable

Groundwater: None encountered

Remarks: Made ground (A) appears to taper towards the east of the Trial Trench (away from the mound) with the overall thickness decreasing.

HoleBASE III (BM 414.8) Standard Trialpit Log V1 dated 26th Mar 03

TRIAL TRENCH LOG

Trial Pit No.
TTMD1-007
Sheet 1 of 1

Project Name:	Mensa Remediation Works	Co-ords: N - 167913.77 E - 467947.32	Ground Level 45.090mOD	Date:	20/08/2008
Project No.	JER3996/MD1				
Location:	AWE Burghfield	Weather:	Cloudy, Warm	Scale	1:25
Client:	AWE plc	Equipment:	JCB 3CX	Logged by:	BC

Samples & In Situ Testing				Depth (m)	Level (m AOD)	Legend	Stratum Description
Depth (m)	Type	Ref	Results				
0.50 0.50	ASB D	1 1		0.60	44.49		(A) Soft, brown, black, sandy, gravelly CLAY. Gravel is fine to coarse, subangular to subrounded of flint and chalk. Frequent brick fragments, pottery and concrete cobbles. (MADE GROUND) Asbestos cement fragment encountered at 0.5mbGL.
				0.80	44.29		(B) Soft to firm, brown, mottled orange, sandy CLAY. Rare brick fragments. (MADE GROUND) Rusted metal sheeting and a rusted horse shoe encountered at 0.6mbGL. Trial Pit Complete at 0.80 m

Trial Trench Extent

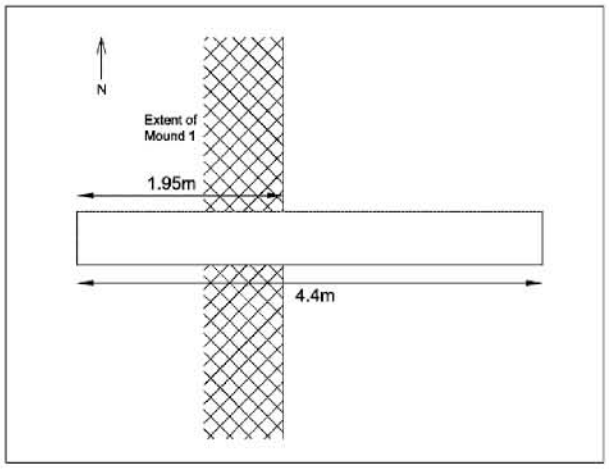

Stability: Stable

Groundwater: None encountered

Remarks: Made ground (A) appears to taper towards the east of the Trial Trench (away from the mound) with the overall thickness decreasing.

HoleBASE III (BM 414.8) Standard Trialpit Log v1 dated 26th Mar 03

TRIAL TRENCH LOG

Trial Pit No.
TTMD1-008
Sheet 1 of 1

Project Name:	Mensa Remediation Works	Co-ords: N - 167897.72 E - 467942.11	Ground Level 44.820mOD	Date:	20/08/2008
Project No.	JER3996/MD1				
Location:	AWE Burghfield	Weather:	Cloudy	Scale	1:25
Client:	AWE plc	Equipment:	JCB 3CX	Logged by:	BC

Samples & In Situ Testing				Depth (m)	Level (m AOD)	Legend	Stratum Description
Depth (m)	Type	Ref	Results				
				0.15	44.67		Soft, brown, black, sandy, very gravelly CLAY. Gravel is fine to coarse, angular to subrounded of flint and chalk. Frequent brick fragments and concrete cobbles. (MADE GROUND)
0.15-0.60	D	1					Soft to firm, grey, brown, sandy, gravelly CLAY. Gravel is fine to coarse, angular to subrounded of flint. Occasional brick, rebar and concrete cobbles (MADE GROUND) Tyre inner tube encountered at 0.3mbGL.
				0.60	44.22		Soft to firm, brown, mottled orange, sandy CLAY. (MADE GROUND)
				1.10	43.72		Trial Pit Complete at 1.10 m

Trial Trench Extent

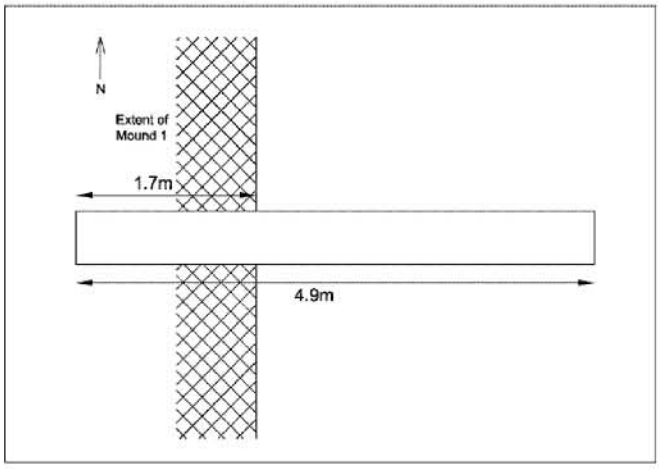

Stability: Stable

Groundwater: None encountered

Remarks: Made ground (A) appears to taper towards the east of the Trial Trench (away from the mound) with the overall thickness decreasing.

HoleBASE III (BM 414.8) Standard Trialpit Log V1 dated 26th Mar 03

HAND PIT LOG

Trial Pit No.
HPMD1-001
Sheet 1 of 1

Project Name:	Mensa Remediation Works	Co-ords:	N - 167902.55 E - 467924.98	Ground Level 46.600mOD	Date: 21/08/2008
Project No.	JER3996/MD1				
Location:	AWE Burghfield	Weather:	Cloudy, Warm		Scale 1:25
Client:	AWE plc	Equipment:	Hand Tools		Logged by: BC

Samples & In Situ Testing				Depth (m)	Level (m AOD)	Legend	Stratum Description
Depth (m)	Type	Ref	Results				
				0.00	46.60		Soft, brown, mottled orange, sandy, gravelly CLAY with frequent rootlets. Frequent brick fragments, concrete cobbles and rebar. Gravel is fine to coarse, angular to subrounded of flint and chalk. (MADE GROUND) Black carbonaceous material encountered at 0.3mbGL.
0.60	D	1		0.60	46.00		Trial Pit Complete at 0.60 m

Stability: Stable

Groundwater: None encountered

Remarks: Hand excavation was difficult due to nature of made ground. Hand pit terminated on concrete boulder.

AGS

HoleBASE III (Bld 4.14.8) Standard Trialpit Log V1 dated 26th Mar 03

HAND PIT LOG

Trial Pit No.
HPMD1-002
Sheet 1 of 1

Project Name:	Mensa Remediation Works	Co-ords:	N - 167900.65 E - 467923.84	Ground Level 46.630mOD	Date: 21/08/2008
Project No.	JER3996/MD1				
Location:	AWE Burghfield	Weather:	Cloudy, Warm		Scale 1:25
Client:	AWE plc	Equipment:	Hand Tools		Logged by: BC

Samples & In Situ Testing				Depth (m)	Level (m AOD)	Legend	Stratum Description
Depth (m)	Type	Ref	Results				
0.00-0.60	D	1		0.30	46.33		Soft, brown, black, slightly sandy, slightly gravelly CLAY with frequent rootlets. Occasional brick fragments, concrete cobbles and rebar. (MADE GROUND)
0.00-0.60	E	1					
0.00-0.60	X	1					Firm, brown, mottled orange, sandy, slighly gravelly CLAY. Gravel is fine to medium, subangular to subrounded of flint and chalk. (MADE GROUND)
0.60	PID1	1	VOCs =3.40ppm				
				1.20	45.43		Trial Pit Complete at 1.20 m

1
2
3
4

Stability: Stable

Groundwater: None encountered

Remarks: Hand excavation was difficult due to nature of made ground. Excavation was in Blast Bund

AGS

HoleBASE III (BM 414.8) Standard Trialpit Log V1 dated 26th Mar 03

HAND PIT LOG

Trial Pit No.
HPMD1-003
Sheet 1 of 1

Project Name:	Mensa Remediation Works	Co-ords:	N - 167901.91 E - 467919.91	Ground Level 47.090mOD	Date: 21/08/2008
Project No.	JER3996/MD1				
Location:	AWE Burghfield	Weather:	Cloudy, Warm		Scale 1:25
Client:	AWE plc	Equipment:	Hand Tools		Logged by: BC

Samples & In Situ Testing				Depth (m)	Level (m AOD)	Legend	Stratum Description
Depth (m)	Type	Ref	Results				
				0.20	46.89		Soft, brown, black, slightly sandy, slightly gravelly CLAY with frequent rootlets. Occasional brick fragments. (MADE GROUND)
0.00-1.00	D	1					Firm, brown, mottled orange, sandy, gravelly CLAY. Gravel is fine to coarse, subangular to subrounded of flint and chalk. Occasional broken bricks and concrete cobbles. (MADE GROUND)
0.00-1.00	E	1					
0.00-1.00	X	1					
1.00	PID1	1	VOCs =1.00ppm				
				1.20	45.89		Trial Pit Complete at 1.20 m

Stability: Stable

Groundwater: None encountered

Remarks: Hand excavation was difficult due to nature of made ground. Excavation was in Blast Bund

HoleBASE III (BM 414.8) Standard Trialpit Log V1 dated 26th Mar 03

HAND PIT LOG

Trial Pit No.
HPMD1-004
Sheet 1 of 1

Project Name:	Mensa Remediation Works	Co-ords:	N - 167903.21 E - 467920.85	Ground Level 47.030mOD	Date: 21/08/2008
Project No.	JER3996/MD1				
Location:	AWE Burghfield	Weather:	Cloudy, Warm		Scale 1:25
Client:	AWE plc	Equipment:	Hand Tools		Logged by: BC

Samples & In Situ Testing				Depth (m)	Level (m AOD)	Legend	Stratum Description
Depth (m)	Type	Ref	Results				
0.00-0.60	D	1					Soft, brown, mottled orange, sandy, gravelly CLAY with frequent rootlets. Frequent brick fragments, concrete cobbles and rebar. Gravel is fine to coarse, angular to subrounded of flint and chalk. (MADE GROUND)
				0.60	46.43		Trial Pit Complete at 0.60 m

Stability: Stable

Groundwater: None encountered

Remarks: Hand excavation was difficult due to nature of made ground. Hand pit terminated on concrete boulder.

AGS

HoleBASE III (Bld 4.14.8) Standard Trialpit Log v1 dated 26th Mar 03

Appendix C

Soil Analysis Results

TEST REPORT
SOIL SAMPLE ANALYSIS

TES Report No. EFS/085478 (Ver. 1)

RPS Group Plc
St Annes House
Oxford Square
Oxford Street
Newbury

Site: Awe Burghfield

The 15 samples described in this report were logged for analysis by TES Bretby on 27-Aug-2008.
The analysis was completed by: 17-Sep-2008

The following tables are contained in this report:

Table 1 Main Analysis Results (Page 2)
Table of Report Notes (Page 3)

On behalf of
TES Bretby :
J Hannah

J. Hannah
Project Co-ordinator

Date of Issue: 17-Sep-2008

Tests marked '^' have been subcontracted to another laboratory.

TES Bretby accepts no responsibility for any sampling not carried out by our personnel.

Where individual results are flagged see report notes for for status.

	Units :																
	Method Codes :	SEN9	Sub02														
	Method Reporting Limits :																
TES ID Number CL/	**Client Sample Description**	**Asbestos (screening)**	**^Asbestos ID**														
0825307	TPMD1-001 0.0-0.4	NBFO															
0826020	HPMD1-001 0.0-0.6	NBFO															
0825299	TTMD1-001 0.2-0.35	NBFO															
0825296	TPMD1-002 0.0-0.6	NBFO															
0825305	TTMD1-002 0.2-0.6	NBFO															
0825314	TPMD1-003 0.0-0.6	NBFO															
0825298	TTMD1-003 0.2-0.35	NBFO															
0825306	TTMD1-003 0.35		CH														
0826019	HPMD1-004 0.0-0.6	NBFO															
0825297	TTMD1-004 0.8	NBFO															
0825300	TTMD1-005 0.3-0.5	NBFO															
0825301	TTMD1-006 0.8	NBFO															
0825303	TTMD1-007 0.5		CH CR														
0825302	TTMD1-007 0.5	NBFO															
0825304	TTMD1-008 0.15-0.6	NBFO															

TES Bretby

PO Box 100, Bretby Business Park,

Burton-on-Trent, Staffordshire, DE15 0XD

Tel +44 (0) 1283 554400

Fax +44 (0) 1283 554422

Client Name **RPS Consultants**

Contact Mr G Moore

Awe Burghfield

Soils Sample Analysis

Date Printed	17-Sep-08
Report Number	**EFS/085478**
Table Number	**1**

TES Bretby

Where individual results are flagged see report notes for for status.

Report Notes

Soil/Solid analysis specific:
Results expressed as mg/kg on an air dried basis unless stated otherwise
S04 analysis not conducted in accordance with BS1377 unless otherwise stated
Water Soluble Sulphate on 2:1 water:soil extract
AR denotes analysis conducted on the As Received sample

Water analysis specific:
Results expressed as mg/l unless stated otherwise

Oil analysis specific:
Results expressed as mg/kg unless stated otherwise
S.G. expressed as g/cm^3@ 15^oC

Filter analysis specific:
Results expressed as mg on filter unless stated otherwise

VOC analysis specific:
Explanatory notes for data flagging
U = undetected above reporting limit
J = concentration at instrument was below lowest calibration standard
E = concentration at instrument was above top calibration standard
B = compound was detected in method blank

Gas (Tedlar bag) analysis specific:
Results expressed as ug/l unless stated otherwise

Air (Carbon tube) analysis specific:
Results expressed as ug on tube unless stated otherwise

Asbestos analysis specific:
CH denotes Chrysotile
CR denotes Crocidolite
AM denotes Amosite
NADIS denotes No Asbestos Detected in Sample
NBFO denotes No Bulk fibres Observed

General notes:
^ this analysis was subcontracted to another laboratory
$ Within laboratory tolerances
$$ unable to analyse due to nature of sample
¥ Results for guidance only, possible interference
& Blank corrected
I.S insufficient sample for analysis
Intf Unable to analyse due to interferences
N.D Not determined
N.R Not recorded
N.Det Not detected
Req Analysis Requested, see attached sheets for results
Þ Raised detection limit due to nature of sample
***** denotes that all accreditation has been removed by the laboratory for this result.
‡ denotes that Mcerts accreditation has been removed by the laboratory for this result.
Note: The Laboratory may only claim that data is accredited when all of the requirements of our Quality System have been met. Where these requirements have not been met the laboratory may elect to include the data in its final report and remove the accreditation from individual data items if it believes that the validity of the data has not been affected.

If you require further details of the circumstances leading to the removal of the accreditation from any data item please do not hesitate to contact the laboratory

END OF REPORT

TEST REPORT
SOIL SAMPLE ANALYSIS

1252

TES Report No. EFS/085506M (Ver. 3)

RPS Group Plc
St Annes House
Oxford Square
Oxford Street
Newbury

Site: Awe Burghfield

The 2 samples described in this report were logged for analysis by TES Bretby on 28-Aug-2008.
The analysis was completed by: 18-Sep-2008

Tests where the accreditation is set to N or No, and any individual data items marked with a * are not UKAS or MCERTS accredited
Any opinions or interpretations expressed herein are outside the scope of any UKAS accreditation held by TES Bretby Laboratories.

The following tables are contained in this report:

Table 1 Main Analysis Results
Table of PAH (MS-SIM) (80) Results
Table of TPH (Si) banding (std)
GC-FID Chromatograms
Table of Report Notes

On behalf of
TES Bretby :
J Hannah

J. Hannah
Project Co-ordinator

Date of Issue: 22-Sep-2008

Accreditation Codes: **N** (Not Accredited), **U** (UKAS), **UM** (UKAS & MCERTS)
Tests marked '^' have been subcontracted to another laboratory.
(NVM) - denotes the sample matrix is dissimilar to matrices upon which the MCERTS validation was based, and is therefore not accredited for MCERTS.
All results are reported on a dry weight basis at 105°C unless otherwise stated. (except QC samples)
TES Bretby accepts no responsibility for any sampling not carried out by our personnel.

Where individual results are flagged see report notes for for status.

Client : RPS Consultants

Site : Awe Burghfield

Report Number : S08_5506M

Sample Descriptions

Lab ID Number	Client ID	Description
CL/0825421	HPMD1-003 0.0-1.0	Brown CLAY
CL/0825412	HPMD1-002 0.0-0.6	Brown CLAY

Units :		mg/kg	mg/kg	mg/kg	mg/kg	mg/kg	mg/kg	mg/kg	mg/kg	mg/kg	mg/kg	mg/kg	%	mg/kg	pH Units		
Method Codes :		ICPACIDS	ICPMSS	ICPMSS	ICPMSS	ICPMSS	ICPMSS	ICPMSS	ICPMSS	ICPMSS	ICPMSS	ICPMSS	TMSS	TPHUSSI	WSLM3		
Method Reporting Limits :		20	2	0.1	3	3	3.5	0.10	2.5	0.5	2.0	19.5	0.2	10.0			
Accreditation Code:		UM	UM	U	UM	UM	UM	U	UM	U	U	UM	U		U		
TES ID Number CL/	**Client Sample Description**	**SO4-- (acid sol)**	**Arsenic (MS)**	**Cadmium (MS)**	**Chromium (MS)**	**Copper (MS)**	**Lead (MS)**	**Mercury (MS)**	**Nickel (MS)**	**Selenium (MS)**	**Vanadium (MS)**	**Zinc (MS)**	**Tot.Moisture @ 105C**	**TPH by GCFID (AR/Si)**	**pH units**		
0825422	HPMD1-002 0.0-0.6	346	9.5	0.15	26.3‡	15.9	24.8	0.18	21	<0.5	41	77.4	23.0	Req	8.0		
0825421	HPMD1-003 0.0-1.0	266	10.9	0.2	32.3‡	14.5	24.1	0.15	23.1	0.5	48.6	74.2	17.5	Req	8.1		

TES Bretby

PO Box 100, Bretby Business Park,

Burton-on-Trent, Staffordshire, DE15 0XD

Tel +44 (0) 1283 554400

Fax +44 (0) 1283 554422

Client Name RPS Consultants

Contact Mr G Moore

Awe Burghfield

Soils Sample Analysis

Date Printed	22-Sep-08
Report Number	**EFS/085506M**
Table Number	**1**

TES Bretby

Where individual results are flagged see report notes for for status.
Results corrected to dry weight at 105℃ where appr opriate, in accordance with the MCERTS standard.

	Units :	mg/kg	mg/kg	mg/kg	mg/kg	mg/kg		mg/kg	% M/M									
	Method Codes :	ICPBOR	ICPMAJ	ICPMAJ	KONECL	PAHMSUS	SEN9	SFAS	WSLM59									
	Method Reporting Limits :	0.5	1	1	5.0	0.08		0.5	0.02									
	Accreditation Code:	N	N	N	N		N	N	N									
TES ID Number CL/	**Client Sample Description**	**Boron (H20 Soluble)**	**Barium**	**Beryllium**	**Chloride:**	**PAH by MS.17(0.08)**	**Asbestos (screening)**	**Sulphide as S (AR)**	**F.O.C. %**									
0825422	HPMD1-002 0.0-0.6	1	42.6	<1	42	Req	NBFO	<0.6	3.56									
0825421	HPMD1-003 0.0-1.0	0.9	71.2	<1	25	Req	NBFO	<0.6	1									

TES Bretby

PO Box 100, Bretby Business Park,

Burton-on-Trent, Staffordshire, DE15 0XD

Tel +44 (0) 1283 554400

Fax +44 (0) 1283 554422

Client Name **RPS Consultants**

Contact Mr G Moore

Awe Burghfield

Soils Sample Analysis

Date Printed	22-Sep-08
Report Number	**EFS/085506M**
Table Number	**1**

Where individual results are flagged see report notes for for status.
Results corrected to dry weight at 105°C where appr opriate, in accordance with the MCERTS standard.

Polycyclic Aromatic Hydrocarbons
GC/MS (SIM)

Customer and Site Details:	RPS Consultants: Awe Burghfield		
Sample Details:	HPMD1-003 0.0-1.0	**Job Number:**	S08_5506M
LIMS ID Number:	CL0825421	**Date Booked in:**	28-Aug-08
QC Batch Number:	3263	**Date Extracted:**	12-Sep-08
Quantitation File:	Initial Calibration	**Date Analysed:**	15-Sep-08
Directory:	0914VOC.MS6\	**Matrix:**	Soil
Dilution:	1.0	**Ext Method:**	Ultrasonic

Accredited?: Yes

Target Compounds	CAS #	R.T. (min)	Concentration mg/kg	% Fit	Accr. code
Naphthalene	91-20-3	-	< 0.10	-	**UM**
Acenaphthylene	208-96-8	-	< 0.10	-	U
Acenaphthene	83-32-9	-	< 0.10	-	UM
Fluorene	86-73-7	-	< 0.10	-	UM
Phenanthrene	85-01-8	-	< 0.10	-	UM
Anthracene	120-12-7	-	< 0.10	-	U
Fluoranthene	206-44-0	-	< 0.10	-	UM
Pyrene	129-00-0	-	< 0.10	-	UM
Benzo[a]anthracene	56-55-3	-	< 0.10	-	UM
Chrysene	218-01-9	-	< 0.10	-	UM
Benzo[b]fluoranthene	205-99-2	-	< 0.10	-	UM
Benzo[k]fluoranthene	207-08-9	-	< 0.10	-	UM
Benzo[a]pyrene	50-32-8	-	< 0.10	-	UM
Indeno[1,2,3-cd]pyrene	193-39-5	-	< 0.10	-	UM
Dibenzo[a,h]anthracene	53-70-3	-	< 0.10	-	UM
Benzo[g,h,i]perylene	191-24-2	-	< 0.10	-	UM
Coronene	191-07-1 *	-	< 0.10	-	N
Total (USEPA16) PAHs	-	-	< 1.55	-	N

* Denotes compound is not UKAS accredited

"M" denotes that % fit has been manually interpreted

Internal Standards	% Area
1,4-Dichlorobenzene-d4	NA
Naphthalene-d8	111
Acenaphthene-d10	97
Phenanthrene-d10	91
Chrysene-d12	80
Perylene-d12	76

Surrogates	% Rec
Nitrobenzene-d5	N.D
2-Fluorobiphenyl	84
Terphenyl-d14	101

Concentrations are reported on a dry weight basis.

The Total PAH result is the sum of non-rounded individual PAH results and therefore may differ to the sum of the rounded individual PAH results printed above. By convention, where any one or more result is a "less than", the total is expressed as a "less than" and includes the "less than" concentration within the total.

Polycyclic Aromatic Hydrocarbons
GC/MS (SIM)

Customer and Site Details:	RPS Consultants: Awe Burghfield		
Sample Details:	HPMD1-002 0.0-0.6	**Job Number:**	S08_5506M
LIMS ID Number:	CL0825422	**Date Booked in:**	28-Aug-08
QC Batch Number:	3263	**Date Extracted:**	12-Sep-08
Quantitation File:	Initial Calibration	**Date Analysed:**	15-Sep-08
Directory:	0914VOC.MS6\	**Matrix:**	Soil
Dilution:	1.0	**Ext Method:**	Ultrasonic

Accredited?: Yes

Target Compounds	CAS #	R.T. (min)	Concentration mg/kg	% Fit	Accr. code
Naphthalene	91-20-3	-	< 0.10	-	**UM**
Acenaphthylene	208-96-8	-	< 0.10	-	U
Acenaphthene	83-32-9	-	< 0.10	-	UM
Fluorene	86-73-7	-	< 0.10	-	UM
Phenanthrene	85-01-8	-	< 0.10	-	UM
Anthracene	120-12-7	-	< 0.10	-	U
Fluoranthene	206-44-0	-	< 0.10	-	UM
Pyrene	129-00-0	-	< 0.10	-	UM
Benzo[a]anthracene	56-55-3	-	< 0.10	-	UM
Chrysene	218-01-9	-	< 0.10	-	UM
Benzo[b]fluoranthene	205-99-2	-	< 0.10	-	UM
Benzo[k]fluoranthene	207-08-9	-	< 0.10	-	UM
Benzo[a]pyrene	50-32-8	-	< 0.10	-	UM
Indeno[1,2,3-cd]pyrene	193-39-5	-	< 0.10	-	UM
Dibenzo[a,h]anthracene	53-70-3	-	< 0.10	-	UM
Benzo[g,h,i]perylene	191-24-2	-	< 0.10	-	UM
Coronene	191-07-1 *	-	< 0.10	-	N
Total (USEPA16) PAHs	-	-	< 1.66	-	N

* Denotes compound is not UKAS accredited

"M" denotes that % fit has been manually interpreted

Internal Standards	% Area
1,4-Dichlorobenzene-d4	NA
Naphthalene-d8	117
Acenaphthene-d10	104
Phenanthrene-d10	103
Chrysene-d12	91
Perylene-d12	83

Surrogates	% Rec
Nitrobenzene-d5	N.D
2-Fluorobiphenyl	85
Terphenyl-d14	101

Concentrations are reported on a dry weight basis.

The Total PAH result is the sum of non-rounded individual PAH results and therefore may differ to the sum of the rounded individual PAH results printed above. By convention, where any one or more result is a "less than", the total is expressed as a "less than" and includes the "less than" concentration within the total.

ALIPHATIC / AROMATIC FRACTION BY GC/FID

Customer and Site Details: RPS Consultants : Awe Burghfield
Job Number: S08_5506
QC Batch Number: 83219
Directory: D:\TES\DATA\Y2008\0910TPH_GC3\060B6801.D
Method: Ultra Sonic

Separation: Silica gel
Eluents: Hexane, DCM

Matrix: Soil
Date Booked in 28-Aug-08
Date Extracted 09-Sep-08
Date Analysed 11-Sep-08

This sample data is not accredited.

		Concentration, (mg/kg) - as dry weight.									
		>C8 - C10		>C10 - C12		>C12 - C16		>C16 - C21		>C21 - C35	
Sample ID	Client ID	Aliphatics	Aromatics	Aliphatics	Aromatics	Aliphatics	Aromatics	Aliphatics	Aromatics	Aliphatics	Aromatics
*											
*											
*											
*											
*											
*											
*											
*											
* CL0825421	HPMD1-003 0.0-0.1	<5	<5	<5	<5	<5	<5	<5	<5	13.9	<10.62
* CL0825422	HPMD1-002 0.0-0.6	<5	<5	<5	<5	<5	<5	<5	<5	23.6	12.2
*											

Where individual results are flagged see report notes for for status.
Results corrected to dry weight at 105℃ where appr opriate, in accordance with the MCERTS standard.

Petroleum Hydrocarbons (C8 to C40) by GC/FID Aliphatics Fraction.

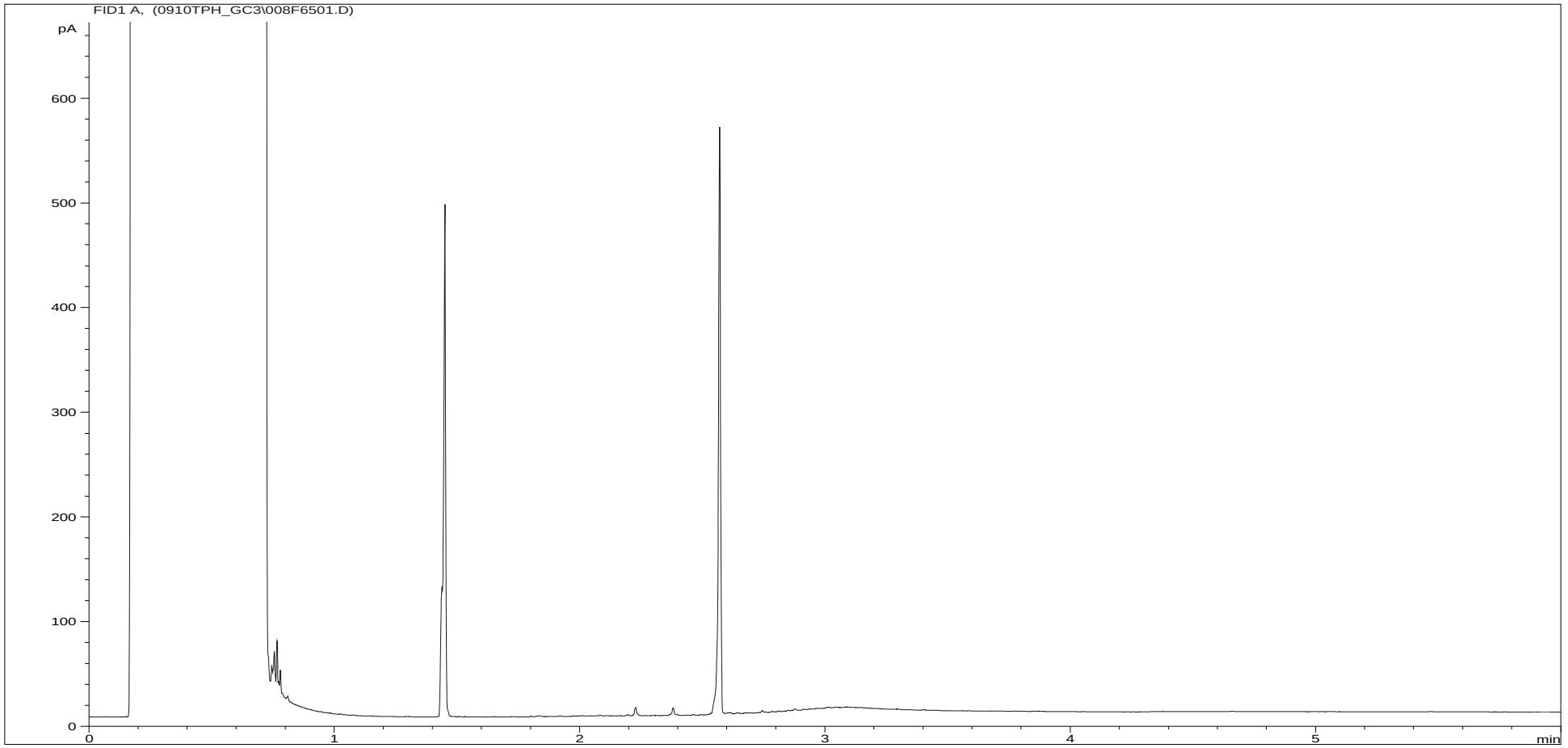

Sample ID:	CL0825421ALI	**Job Number:**	S08_5506M
Multiplier:	15.54	**Client:**	RPS Consultants
Dilution:	1	**Site:**	Awe Burghfield
Acquisition Method:	5UL_RUNF.M	**Client Sample Ref:**	HPMD1-003 0.0-0.1
Acquisition Date/Time:	10-Sep-08		
Datafile:	D:\TES\DATA\Y2008\0910TPH_GC3\008F6501.D		

Where individual results are flagged see report notes for for status.

Results corrected to dry weight at 105℃ where appr opriate, in accordance with the MCERTS standard.

Petroleum Hydrocarbons (C8 to C40) by GC/FID Aromatics Fraction.

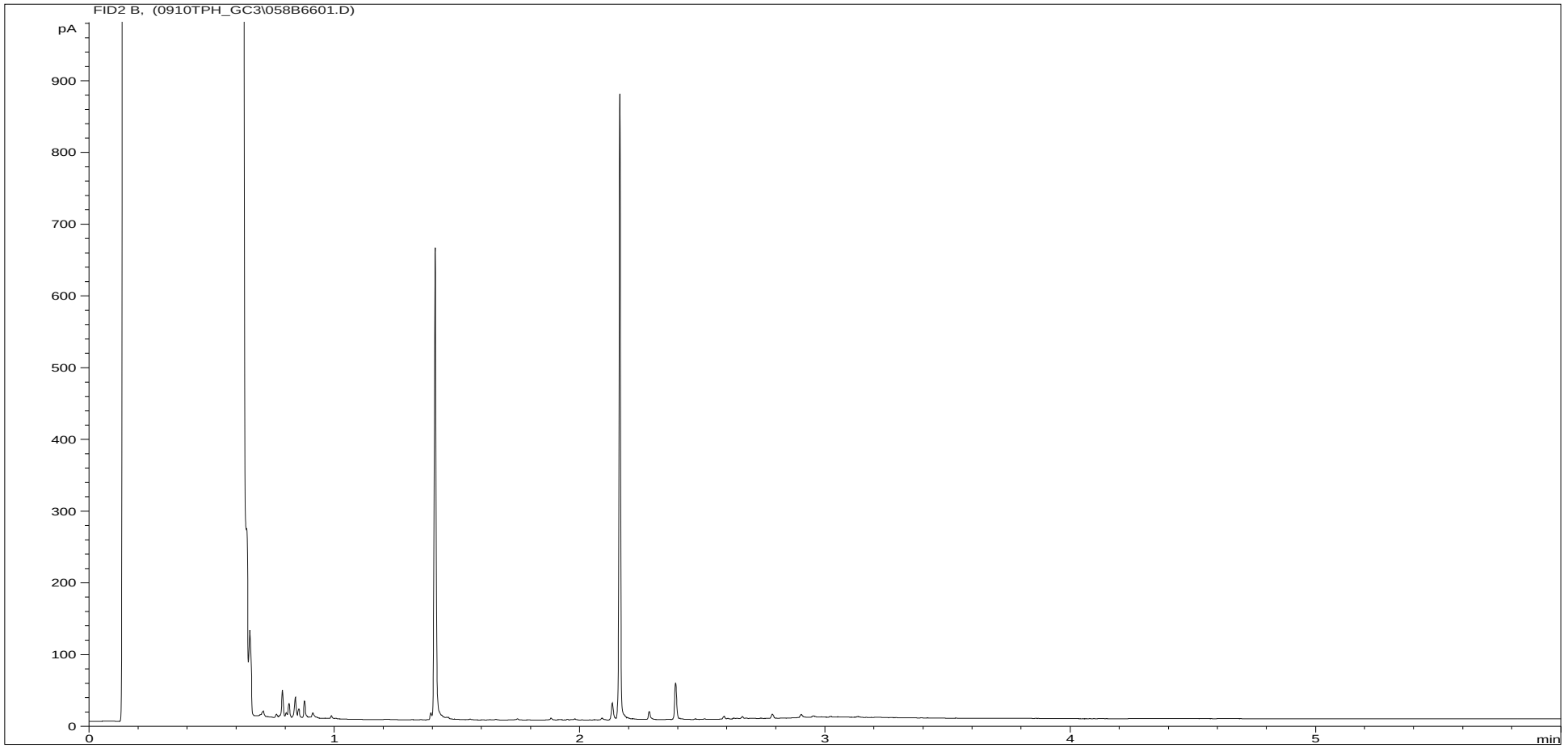

Sample ID:	CL0825421ARO	**Job Number:**	S08_5506M
Multiplier:	12.18	**Client:**	RPS Consultants
Dilution:	1	**Site:**	Awe Burghfield
Acquisition Method:	5UL_RUNF.M	**Client Sample Ref:**	HPMD1-003 0.0-0.1
Acquisition Date/Time:	10-Sep-08		
Datafile:	D:\TES\DATA\Y2008\0910TPH_GC3\058B6601.D		

Petroleum Hydrocarbons (C8 to C40) by GC/FID Aliphatics Fraction.

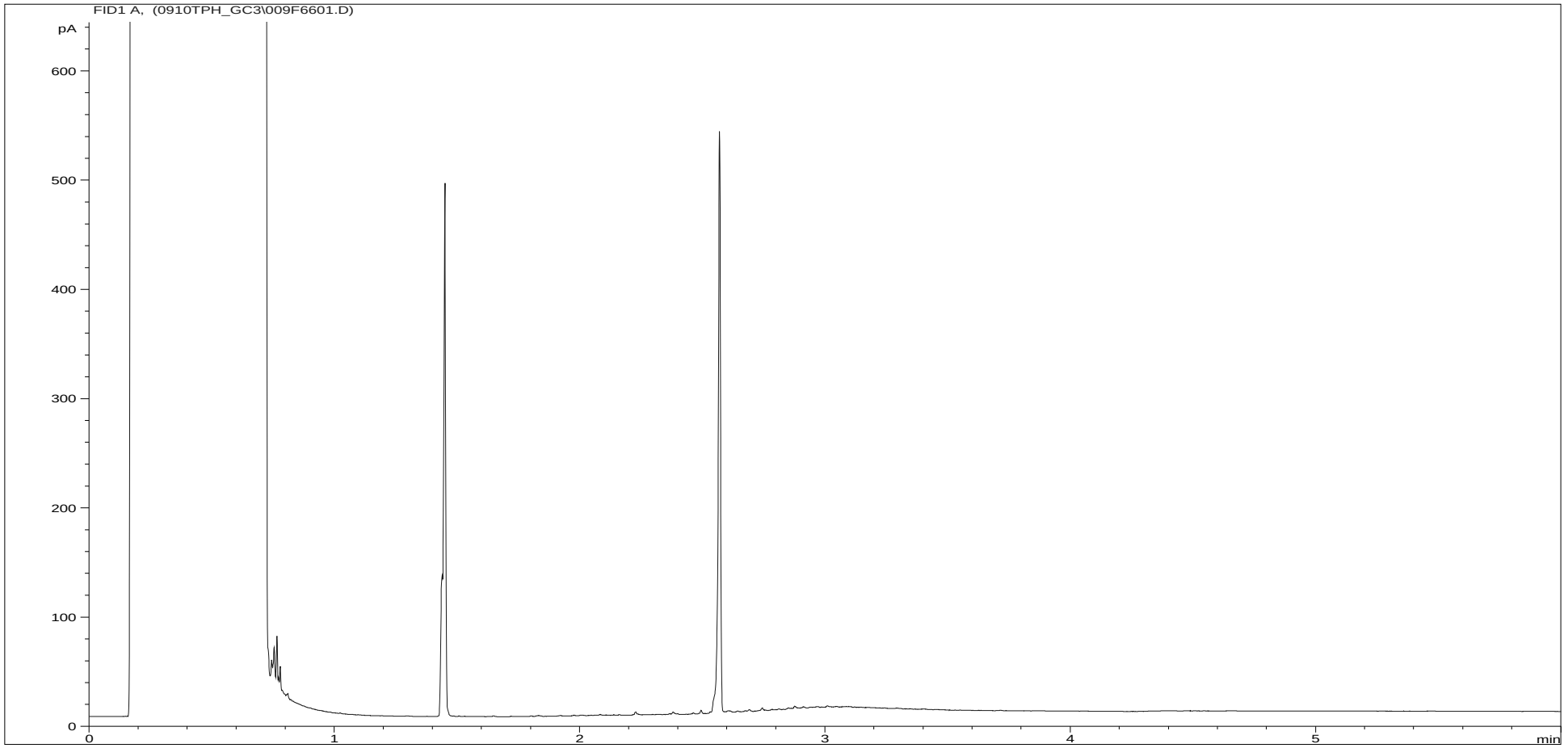

Sample ID:	CL0825422ALI	**Job Number:**	S08_5506M
Multiplier:	15.96	**Client:**	RPS Consultants
Dilution:	1	**Site:**	Awe Burghfield
Acquisition Method:	5UL_RUNF.M	**Client Sample Ref:**	HPMD1-002 0.0-0.6
Acquisition Date/Time:	10-Sep-08		
Datafile:	D:\TES\DATA\Y2008\0910TPH_GC3\009F6601.D		

Petroleum Hydrocarbons (C8 to C40) by GC/FID Aromatics Fraction.

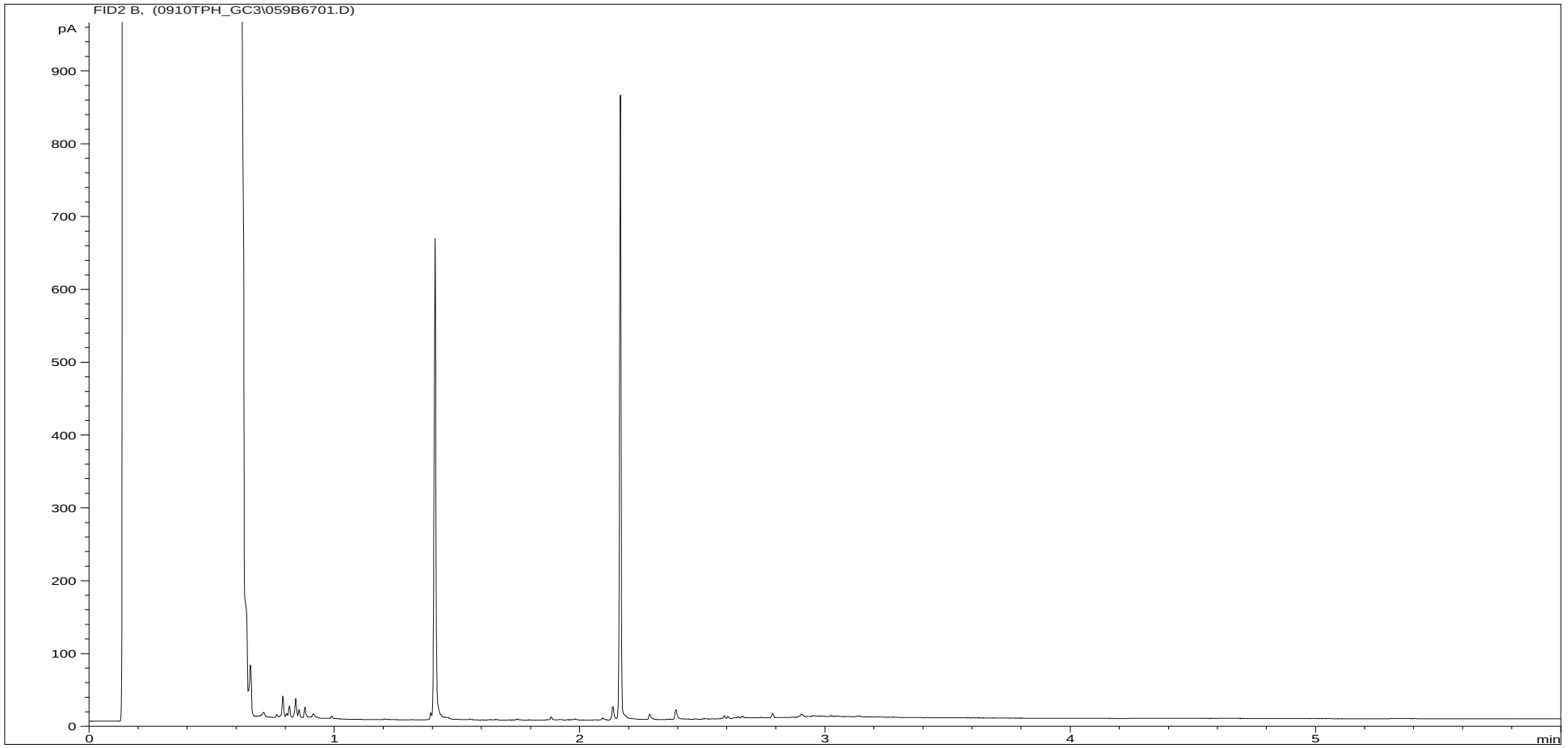

Sample ID:	CL0825422ARO	**Job Number:**	S08_5506M
Multiplier:	12.18	**Client:**	RPS Consultants
Dilution:	1	**Site:**	Awe Burghfield
Acquisition Method:	5UL_RUNF.M	**Client Sample Ref:**	HPMD1-002 0.0-0.6
Acquisition Date/Time:	10-Sep-08		
Datafile:	D:\TES\DATA\Y2008\0910TPH_GC3\059B6701.D		

Where individual results are flagged see report notes for for status.

Results corrected to dry weight at 105℃ where appr opriate, in accordance with the MCERTS standard.

Report Notes

Soil/Solid analysis specific:

S04 analysis not conducted in accordance with BS1377 unless otherwise stated
Water Soluble Sulphate on 2:1 water:soil extract
AR denotes analysis conducted on the As Received sample

Water analysis specific:
Results expressed as mg/l unless stated otherwise

Oil analysis specific:
Results expressed as mg/kg unless stated otherwise
S.G. expressed as g/cm^3@ 15°C

Filter analysis specific:
Results expressed as mg on filter unless stated otherwise

VOC analysis specific:
Explanatory notes for data flagging
U = undetected above reporting limit
J = concentration at instrument was below lowest calibration standard
E = concentration at instrument was above top calibration standard
B = compound was detected in method blank

Gas (Tedlar bag) analysis specific:
Results expressed as ug/l unless stated otherwise

Air (Carbon tube) analysis specific:
Results expressed as ug on tube unless stated otherwise

Asbestos analysis specific:
CH denotes Chrysotile
CR denotes Crocidolite
AM denotes Amosite
NADIS denotes No Asbestos Detected in Sample
NBFO denotes No Bulk fibres Observed

General notes:
^ this analysis was subcontracted to another laboratory
$ Within laboratory tolerances
$$ unable to analyse due to nature of sample
¥ Results for guidance only, possible interference
& Blank corrected
I.S insufficient sample for analysis
Intf Unable to analyse due to interferences
N.D Not determined
N.R Not recorded
N.Det Not detected
Req Analysis Requested, see attached sheets for results
Þ Raised detection limit due to nature of sample
***** denotes that all accreditation has been removed by the laboratory for this result.
‡ denotes that Mcerts accreditation has been removed by the laboratory for this result.
Note: The Laboratory may only claim that data is accredited when all of the requirements of our Quality System have been met. Where these requirements have not been met the laboratory may elect to include the data in its final report and remove the accreditation from individual data items if it believes that the validity of the data has not been affected.

If you require further details of the circumstances leading to the removal of the accreditation from any data item please do not hesitate to contact the laboratory

END OF REPORT