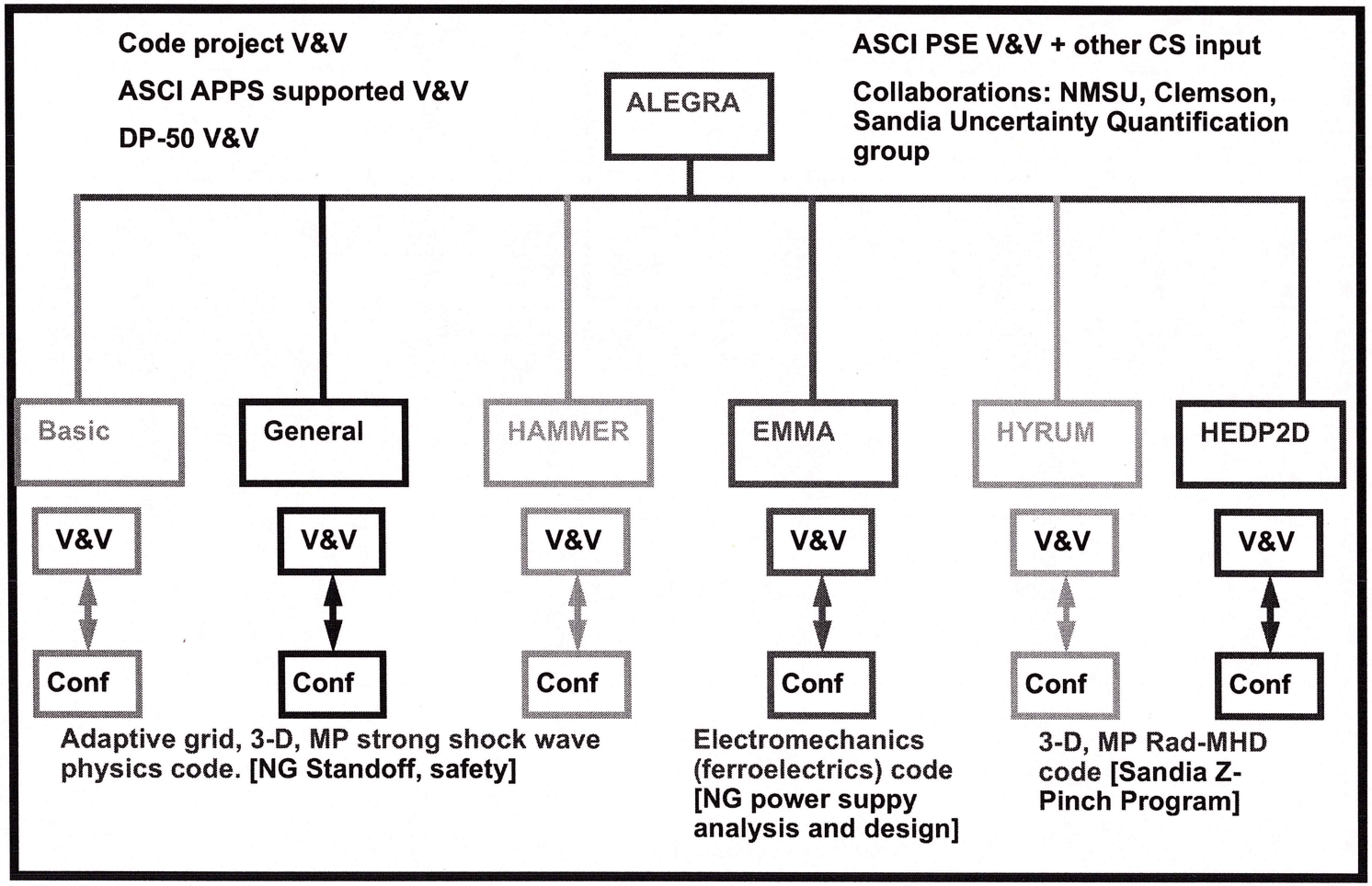ALEGRA is a multiphysics code: